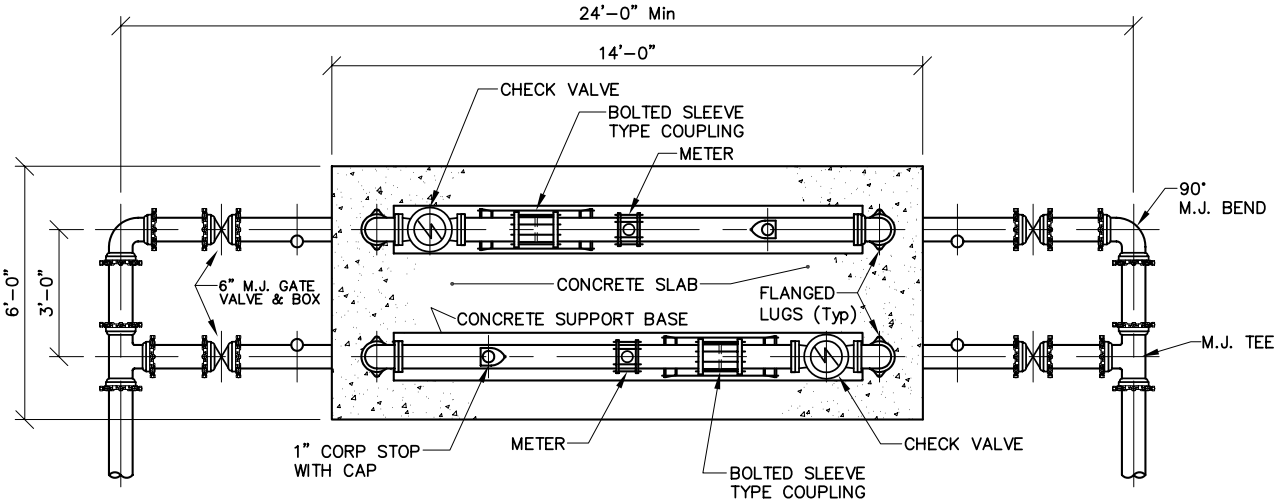

PLAN

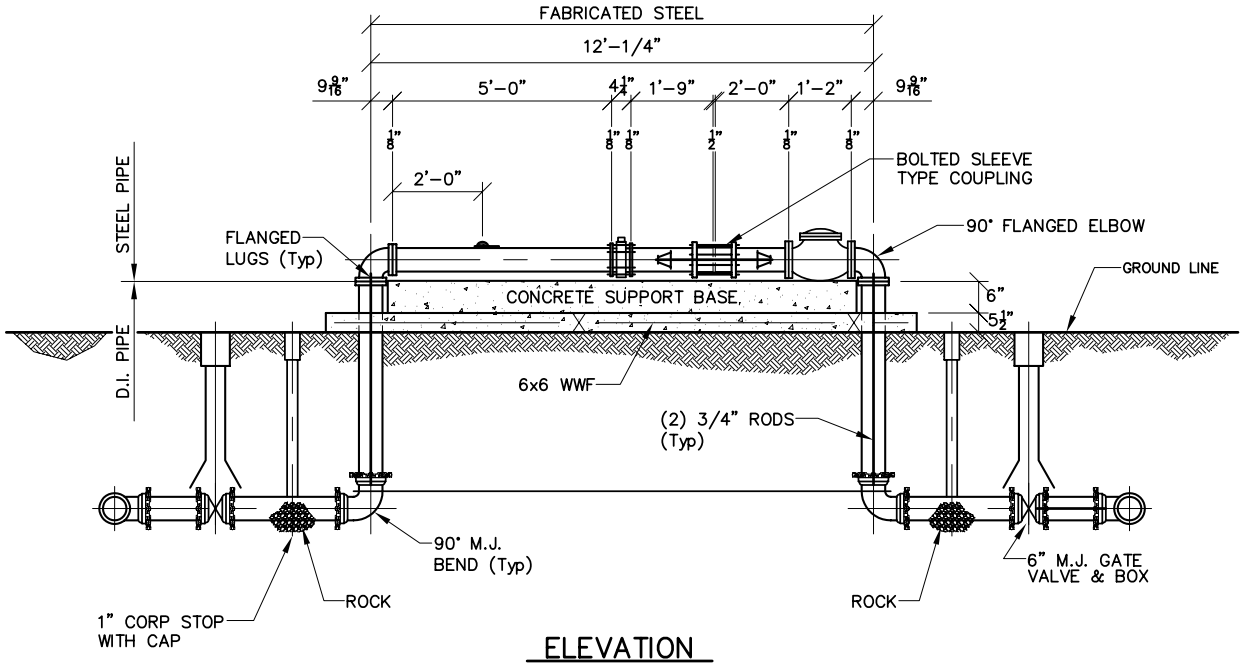

ELEVATION

DENVER WATER
1600 West 12th Avenue • Denver, Colorado 80204
Phone(303)628-6000 • Telecopier No.(303)628-6851

ABOVE GROUND DUAL SYSTEM INTERCONNECTION

Scale: NONE	Date: AUGUST 1995
Drawn: C.B.B.	Tr: ____ Ck: ____
Approved: ____	Dr. 127 No. 35

REVISED 5-2002