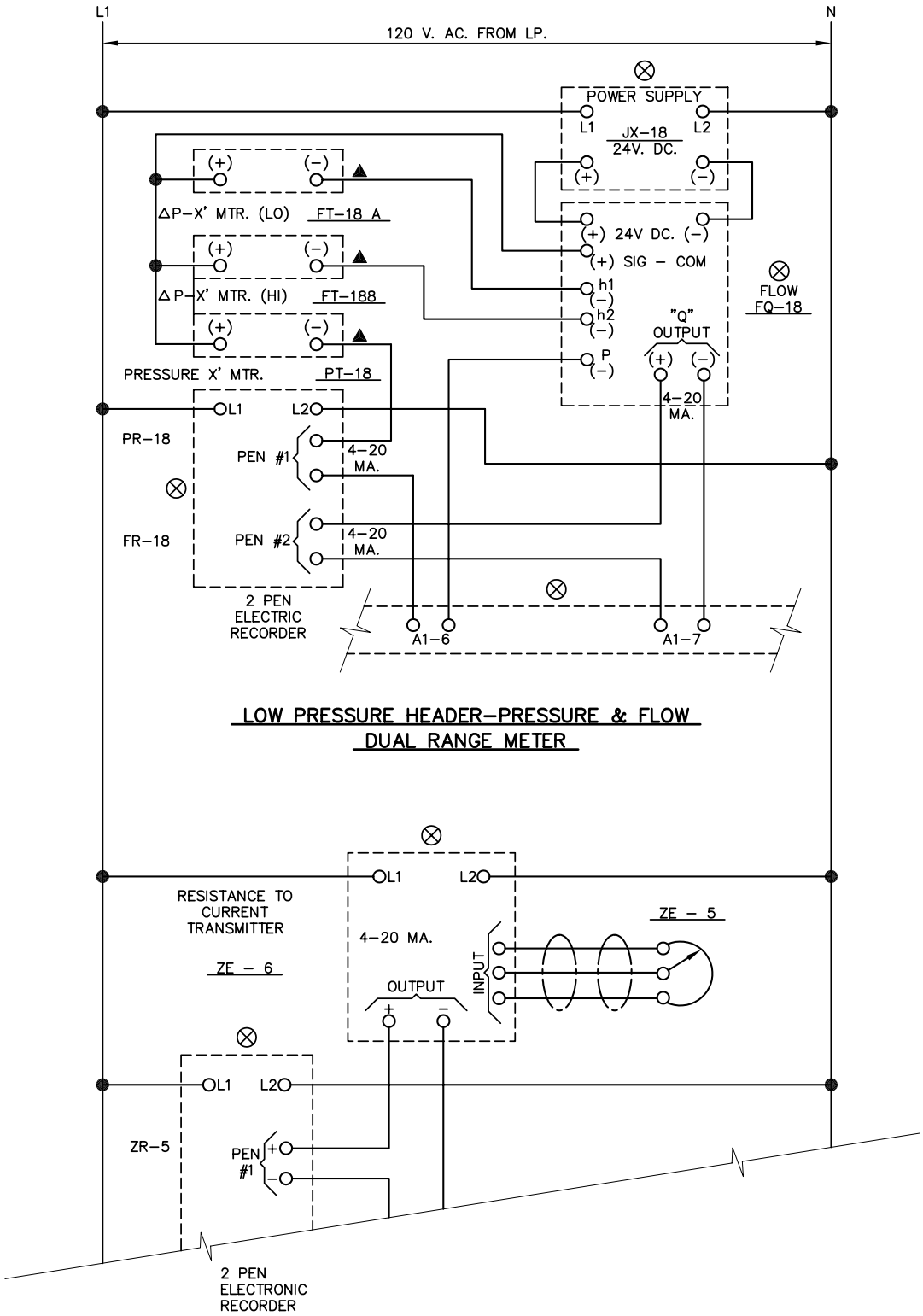

PUMP DISCHARGE VALVE
VALVE POSITION

DENVER WATER
1600 West 12th Avenue • Denver, Colorado 80204
Phone(303)628-6000 • Telecopier No.(303)628-6851

INSTRUMENTATION AND CONTROL
LADDER DIAGRAM
TYPICAL

Scale: NONE	Date: AUGUST 1995
Drawn: C.B.B.	Tr: Ck:
Approved:	Dr. 127 No. 35

REVISED 5-2002