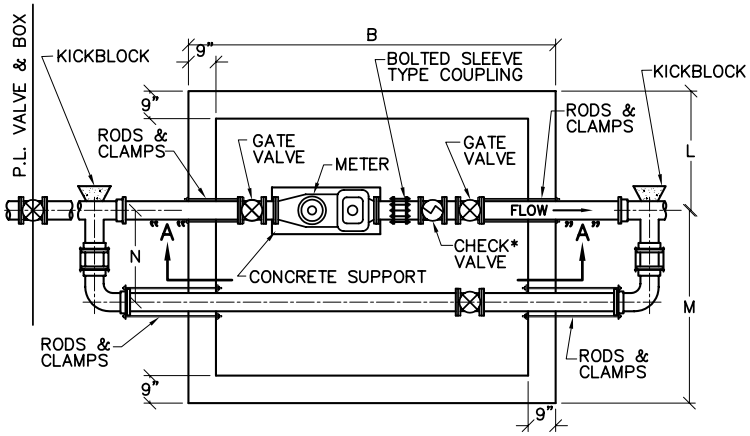

PLAN OF PIPING

NOTE:
1" MASTIC @ ALL RODS THRU WALLS.

LL= TOP OR BOTTOM MM= BOTTOM ONLY

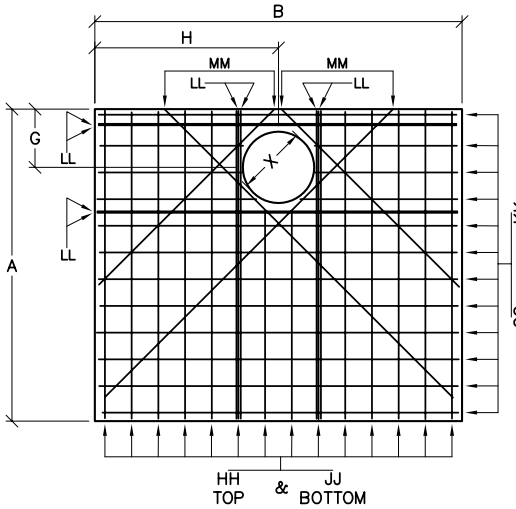

ROOF SLAB

NOTE:
THE ROOF SLAB MAY BE CAST IN SECTIONS AS LONG AS THE INDIVIDUAL SECTION WEIGHT DOES NOT EXCEED 7,500 POUNDS ACCORDING TO MS-26.

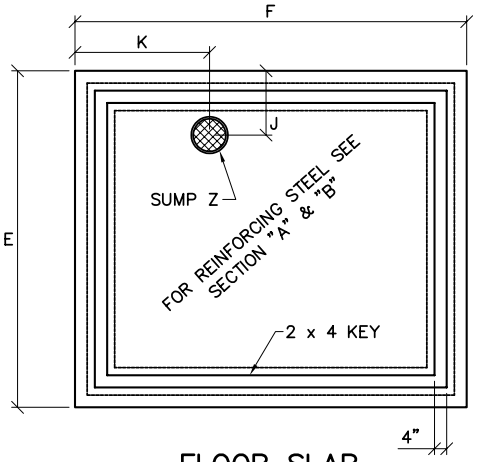

FLOOR SLAB

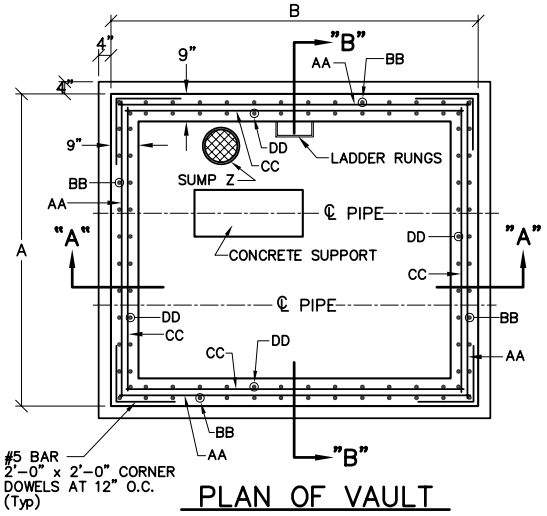

PLAN OF VAULT

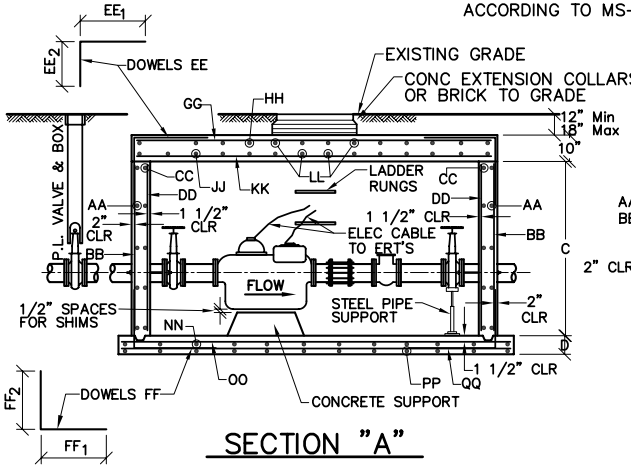

SECTION "A"

SEE SHEET NO. 59 FOR DIMENSIONS CORRESPONDING TO THIS DRAWING.

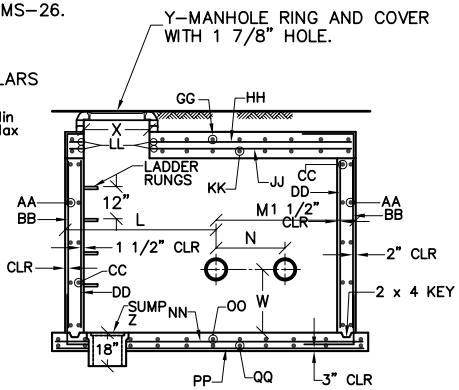

NOTE: PIPE ENCASED WITH MASTIC

SECTION "B"

NOTE:
EACH METER REGISTER REQUIRES AN ELECTRONIC DIGITAL ENCODER OR MECHANICALLY ENCODED REGISTER WITH AN ITRON ERT MODEL W40-1 FOR OUTSIDE AND W40 FOR INSIDE INSTALLATIONS EXCEPT FOR MASTER METER DISTRIBUTORS.

NOTE:
THE DISTANCE BETWEEN RUNGS, CLEATS AND STEPS SHALL NOT EXCEED 12 INCHES AND SHALL BE UNIFORM THROUGHOUT THE LENGTH OF THE LADDER.

DENVER WATER
1600 West 12th Avenue • Denver, Colorado 80204
Phone(303)628-6000 • Telecopier No.(303)628-6851

SENSUS COMPACT FIRELINE METER WITH BYPASS

Scale: NONE Date: AUGUST 1995

Drawn: C.B.B. Tr: Ck:

Approved: Dr. 127 No. 35

REVISED 5-2002