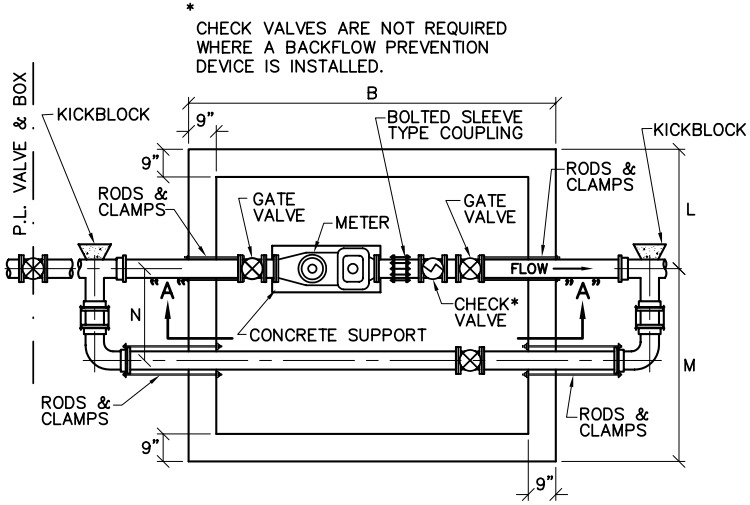

PLAN OF PIPING

NOTE:
1" MASTIC Typ @ ALL RODS THRU WALLS.

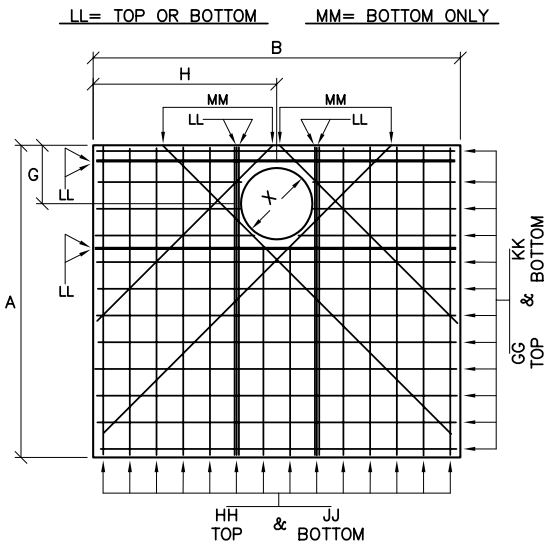

ROOF SLAB

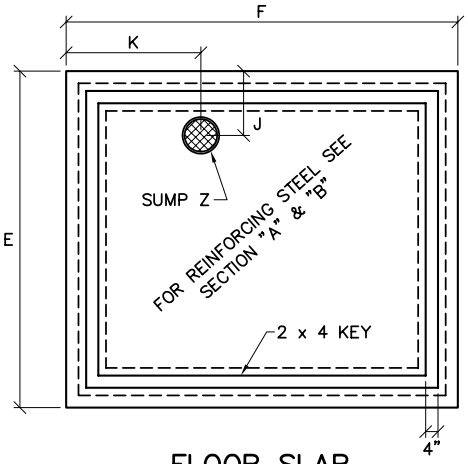

FLOOR SLAB

NOTE:
THE ROOF SLAB MAT BE CAST IN SECTIONS FOR FUTURE ACCESS. THE INDIVIDUAL SECTION WEIGHT MUST NOT EXCEED 7,500 POUNDS ACCORDING TO MS-26.

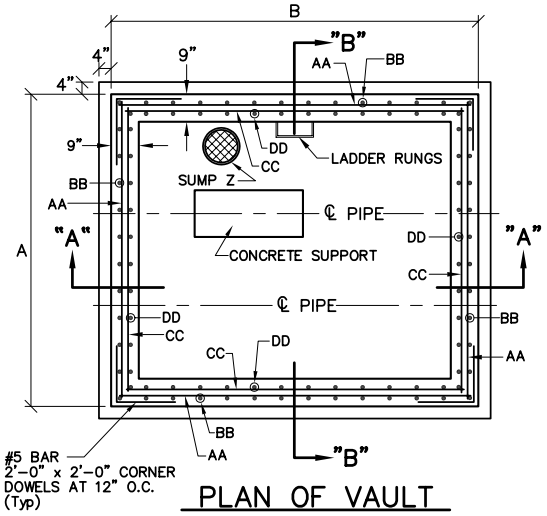

PLAN OF VAULT

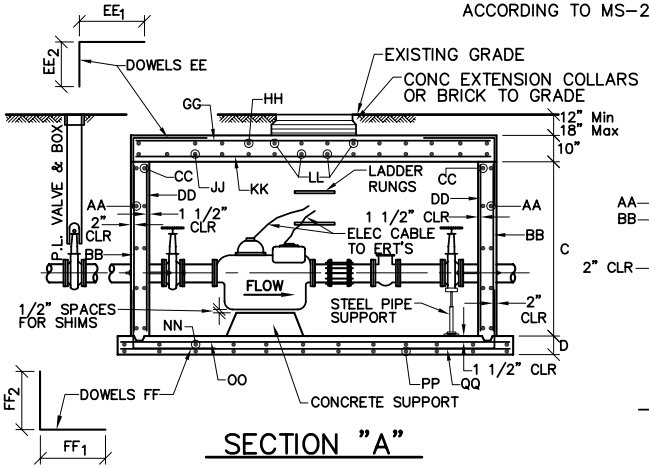

SECTION "A"

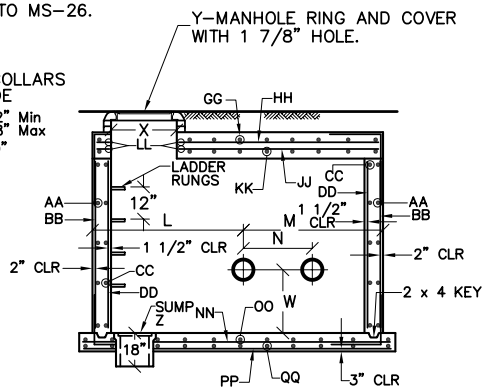

NOTE: PIPE ENCASED WITH MASTIC

SECTION "B"

SEE SHEET NO. 57 FOR DIMENSIONS CORRESPONDING TO THIS DRAWING.

NOTE:
EACH METER REGISTER REQUIRES AN ELECTRONIC DIGITAL ENCODER OR MECHANICALLY ENCODED REGISTER WITH AN ITRON ERT MODEL W40-1 FOR OUTSIDE AND W40 FOR INSIDE INSTALLATIONS EXCEPT FOR MASTER METER DISTRIBUTORS.

NOTE:
THE DISTANCE BETWEEN RUNGS, CLEATS AND STEPS SHALL NOT EXCEED 12 INCHES AND SHALL UNIFORM THROUGHOUT THE LENGTH OF THE LADDER.

DENVER WATER
1600 West 12th Avenue · Denver, Colorado 80204
Phone(303)628-6000 · Telecopier No.(303)628-6851

COMPOUND METER WITH BOTH CHECK VALVE AND BYPASS

Scale: NONE
Date: AUGUST 1995
Drawn: C.B.B.
Tr:
Ck:
Approved:
Dr. 127 No. 35

REVISED 5-2002