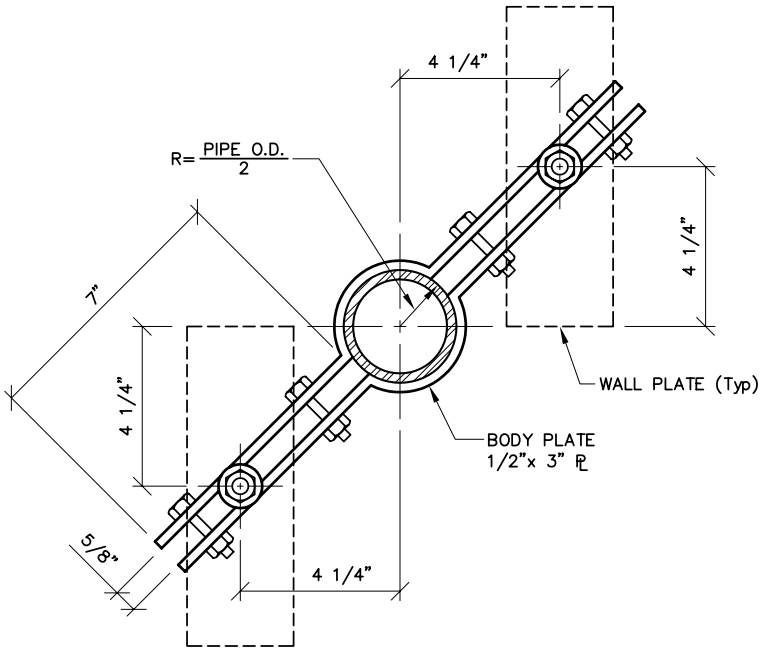

SECTION A–A

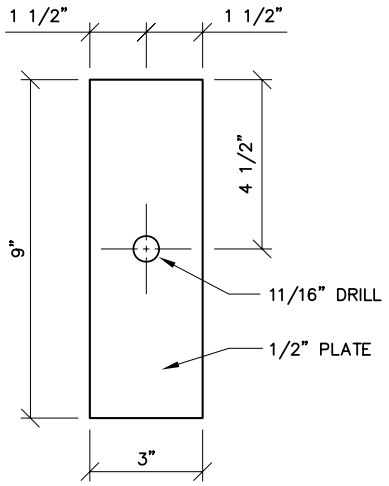

WALL PLATE
4 REQUIRED

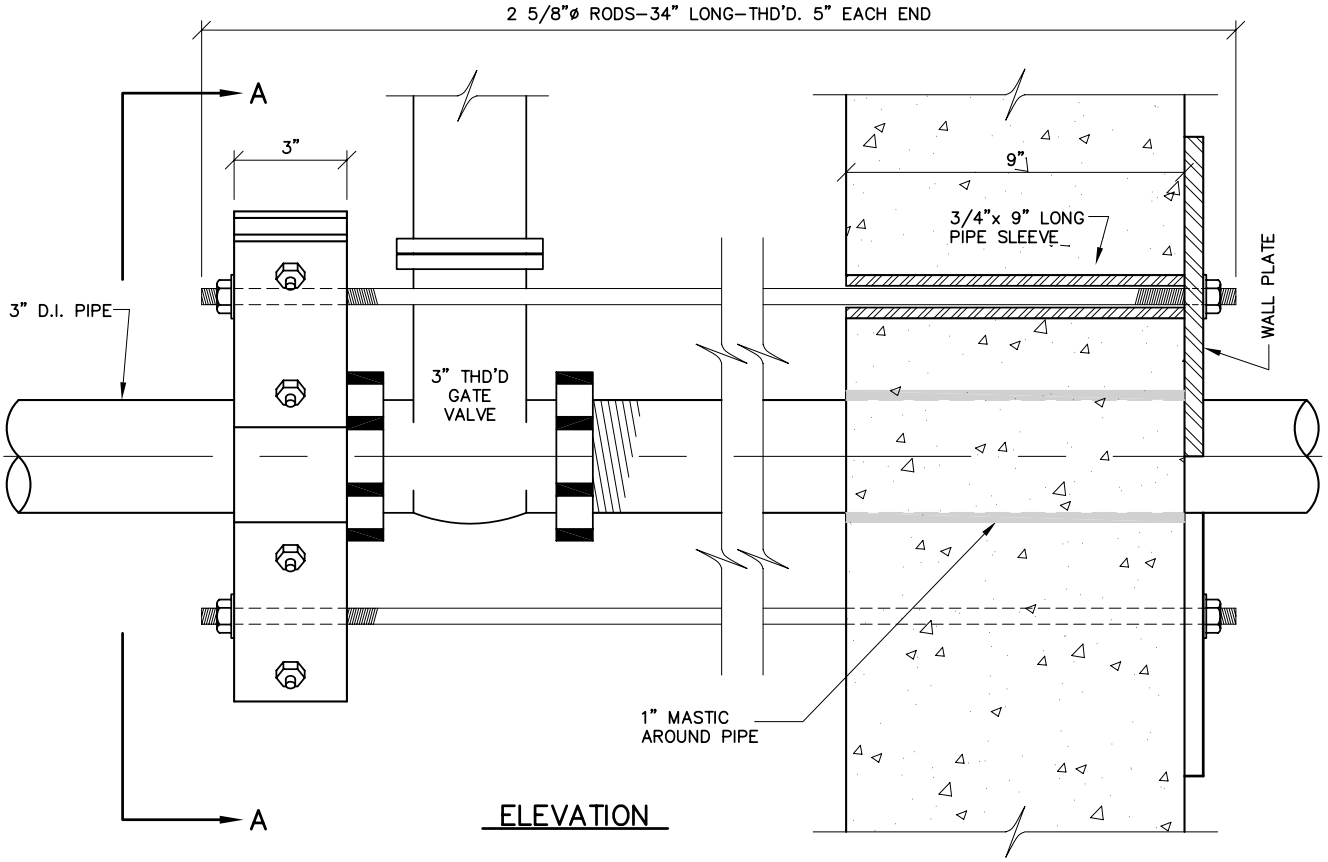

ELEVATION

DENVER WATER
1600 West 12th Avenue • Denver, Colorado 80204
Phone(303)628–6000 • Telecopier No.(303)628–6851

WALL PLATES AND BODY CLAMPS FOR 3" METERS

Scale: NONE	Date: AUGUST 1995	
Drawn: C.B.B.	Tr:	Ck:
Approved:	Dr. 127	No. 35

REVISED 5–2002