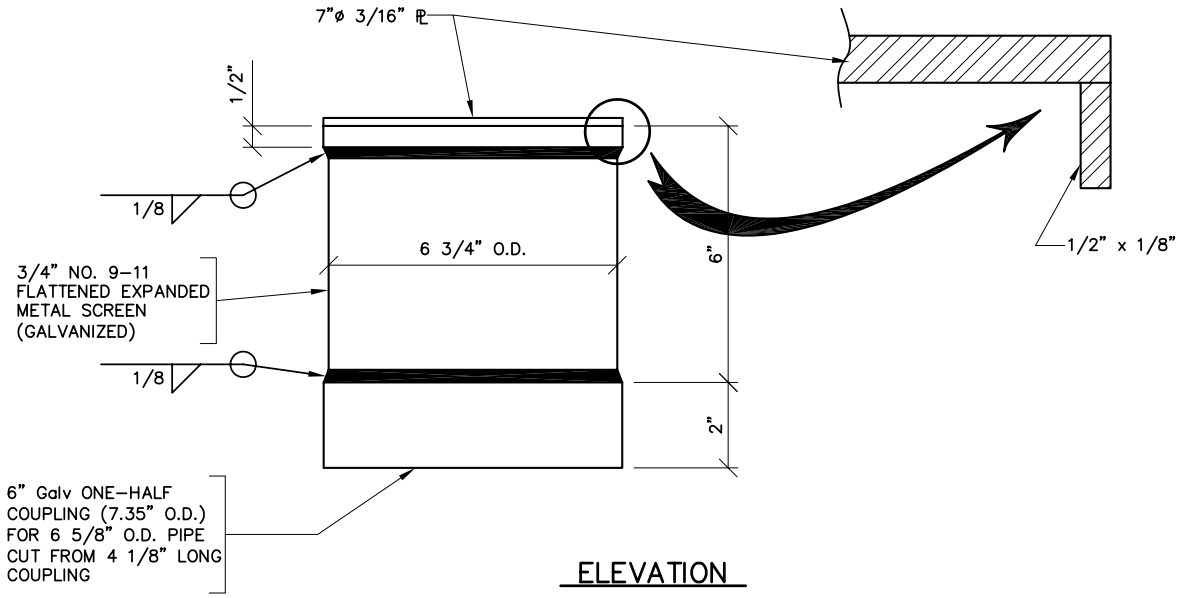

ELEVATION

SCREEN FOR 6" VENT PIPE

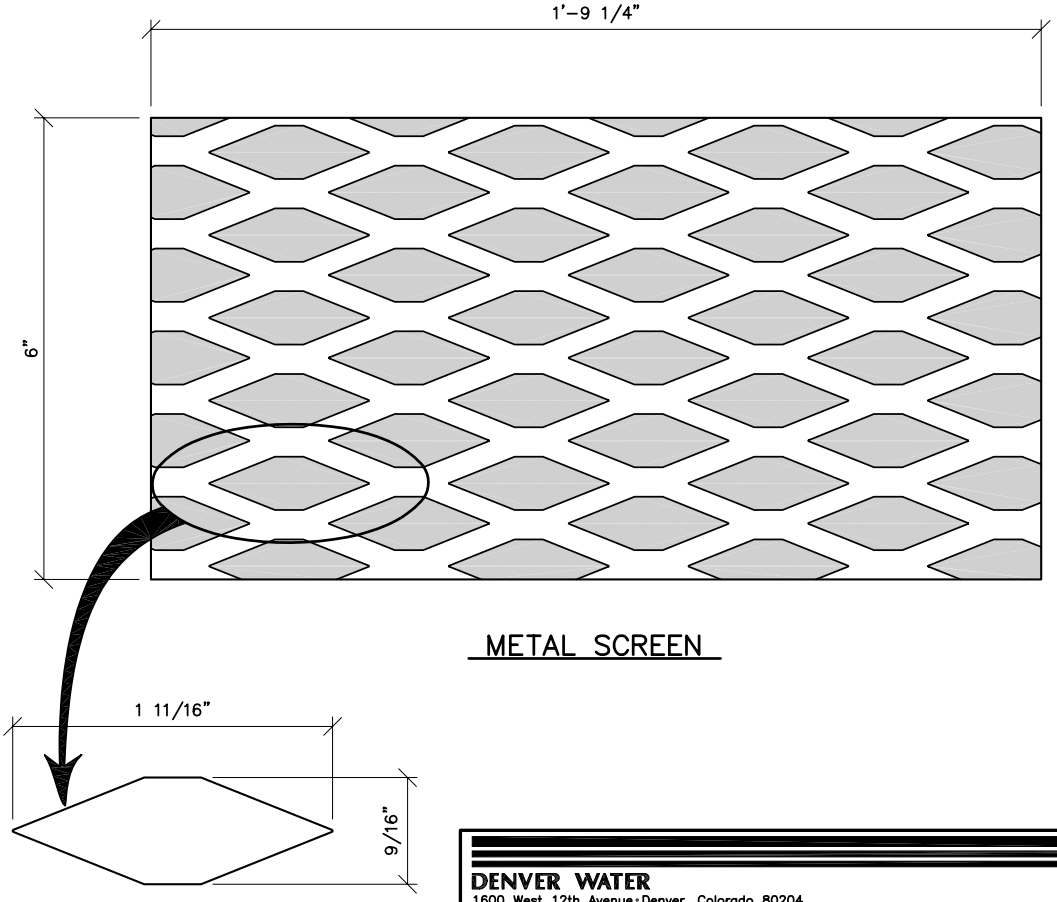

METAL SCREEN

DENVER WATER
1600 West 12th Avenue · Denver, Colorado 80204
Phone(303)628-6000 · Telecopier No.(303)628-6851

6" DIAMETER VENT PIPE SCREEN

Scale: NONE	Date: JUNE 1995	
Drawn: C.B.B.	Tr:	Ck:
Approved:	Dr. 127	No. 35

REVISED 5-2002