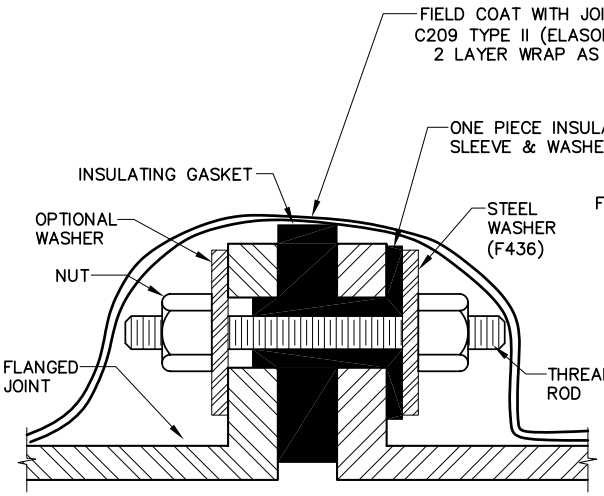

INSULATED JOINT

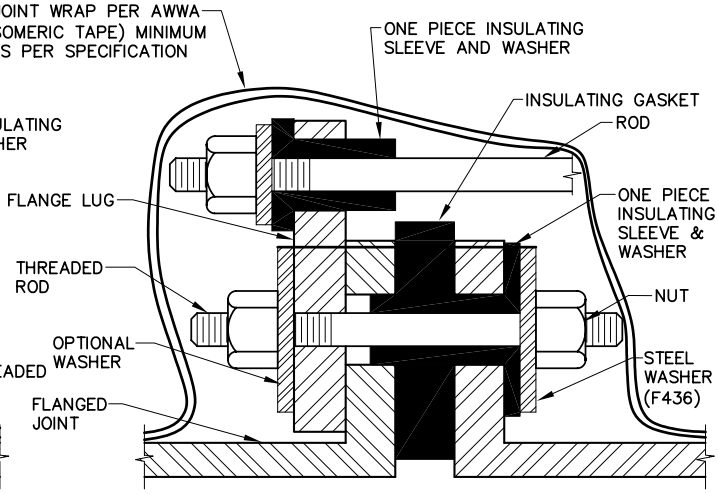

INSULATED ROD

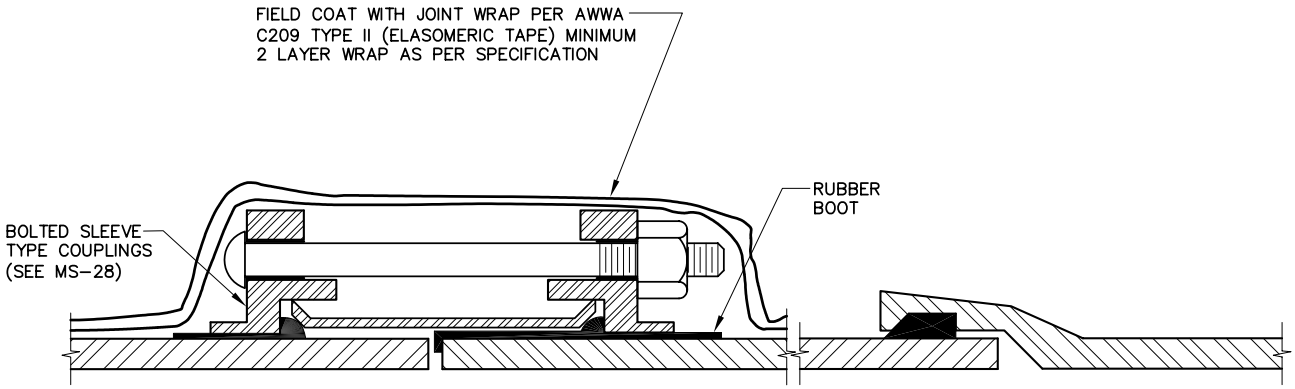

INSULATED BOLTED SLEEVE TYPE COUPLING

DENVER WATER
1600 West 12th Avenue · Denver, Colorado 80204
Phone(303)628-6000 · Telecopier No.(303)628-6851

INSULATED JOINTS, RODS AND BOLTED SLEEVE TYPE COUPLINGS

Scale: NONE	Date: JULY 1995	
Drawn: C.B.B.	Tr:	Ck:
Approved:	Dr. 127 No. 35	

REVISED 5-2002