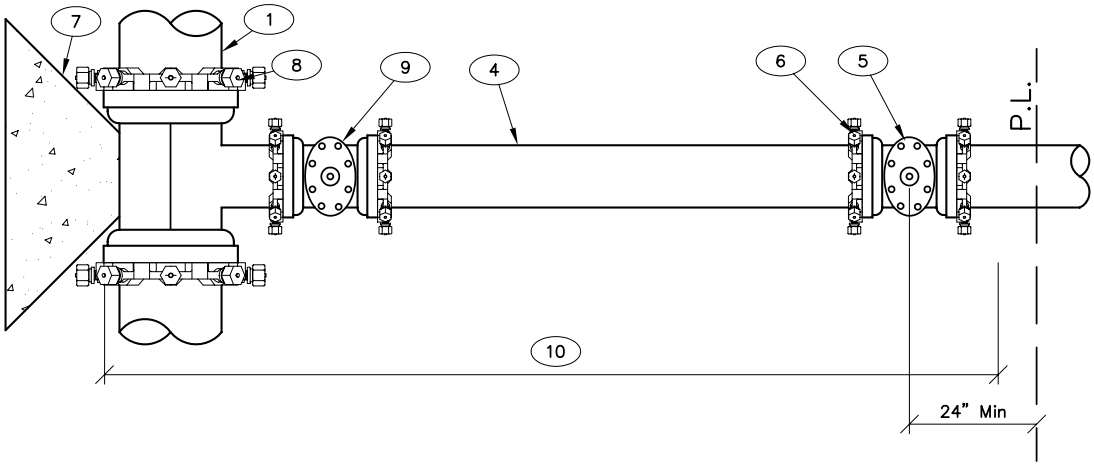

FIRELINE OR DOMESTIC CONNECTION WITH MAIN EXTENSION

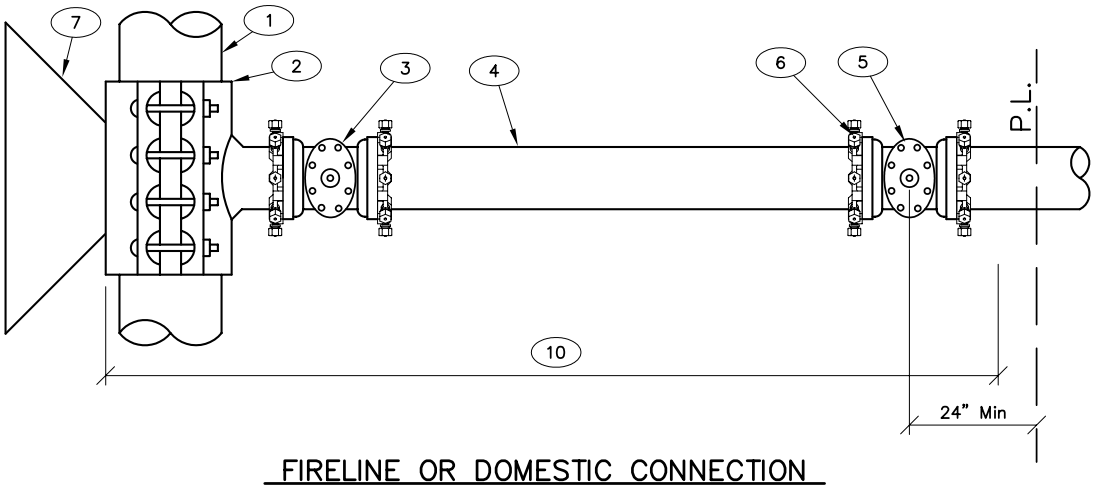

FIRELINE OR DOMESTIC CONNECTION

1. EXISTING MAIN
2. TAPPING SLEEVE
3. TAPPING VALVE
4. DOUBLE SPIGOT PIPE
5. PROPERTY LINE VALVE
6. MEGALUG
7. CONCRETE KICKBLOCK
8. M.J. ANCHORING TEE (SWIVEL TEE WHERE APPLICABLE)
9. M.J. VALVE
10. POLYETHYLENE WRAPPED

DENVER WATER
1600 West 12th Avenue · Denver, Colorado 80204
Phone(303)628–6000 · Telecopier No.(303)628–6851

2" AND LARGER DOMESTIC AND FIRELINE CONNECTIONS

Scale: NONE	Date: JULY 1995	
Drawn: C.B.B.	Tr:	Ck:
Approved:	Dr. 127	No. 35

REVISED 5–2002