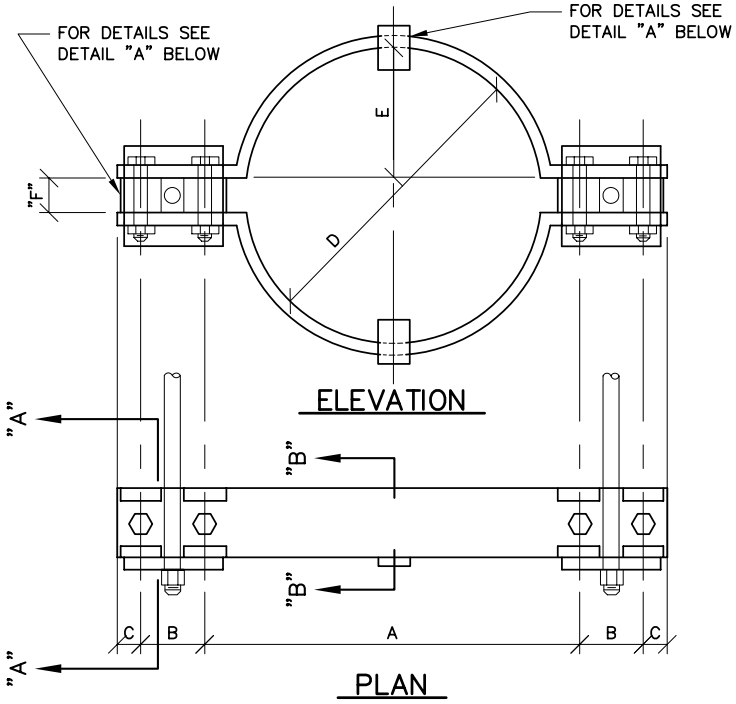

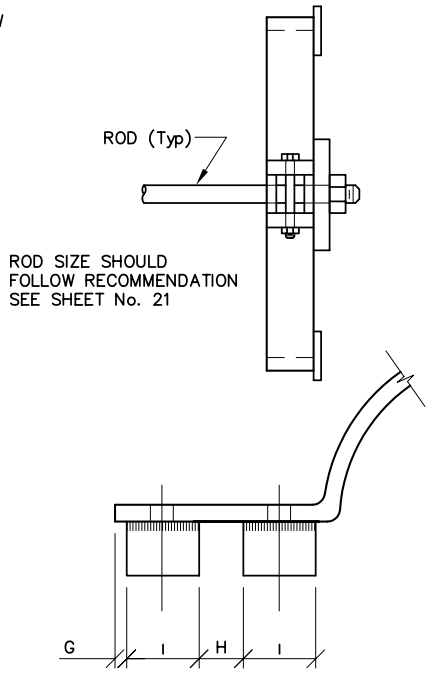

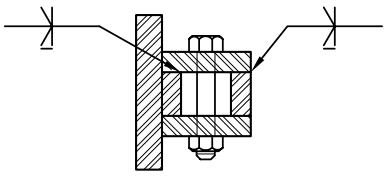

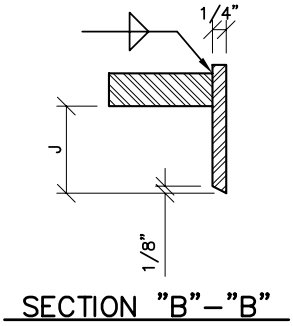

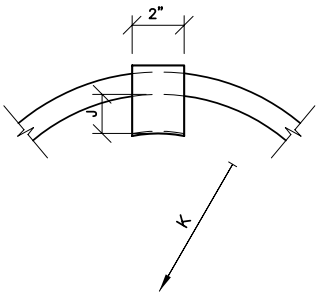

TABLE OF DIMENSIONS FOR CLAMPS

PIPE Dia	BAR SIZE	A		B		C		D		E		F		G		H		I		J	K	BOLT SIZE		PIPE Dia
		BELL CLAMP	BODY CLAMP	BELL CLAMP	BODY CLAMP	BELL CLAMP	BODY CLAMP	BELL CLAMP	BODY CLAMP	BELL CLAMP	BODY CLAMP	BELL CLAMP	BODY CLAMP	BELL CLAMP	BELL CLAMP	BELL CLAMP	BODY CLAMP	BELL CLAMP	BODY CLAMP	BELL CLAMP	BODY CLAMP	BELL CLAMP	BODY CLAMP	
4	1 1/2x 1/2	9	7 3/8	3	4	1 1/2	1 1/2	6 1/4	4 3/4	2 5/8	1 7/8			3/8	3/8	1 1/4	1 1/4	2 1/4	2 1/2	5/8	2 1/2	3x 1 1/2	2 1/2x 3/8	4
6	2 x 1/2	11 1/4	9 5/8	3	4	1 1/2	1 1/2	8 1/2	6 7/8	3 3/4	2 15/16							2 1/4	2 1/2	1/2	3 3/4	3 1/2x 1/2	3 1/2x 1/2	6
8	2 1/2x 1/2	13 5/8	11 7/8	3 1/2	4	1 1/2	1 1/2	10 3/4	9 1/8	4 7/8	4 1/16							2 1/4	2 1/2	5/8	4 3/4	4 1/2x 1/2	4x 1/2	8
12	2 1/2x 5/8	18 1/4	16 3/8	3 1/2	4	1 1/2	1 1/2	15 1/8	13 1/4	7 1/16	6 1/8							2 1/4	2 1/2	13/16	6 3/4	4 1/2x 5/8	4 1/2x 5/8	12
16	3x 3/4	23 1/8	20 5/8	4	4 1/2	1 1/2	1 1/2	19 3/4	17 3/8	9 1/4	8 1/16	1 1/4	1 1/4	1/4	1/4	1 1/2	1 1/2	2 1/4	2 3/4	15/16	8 15/16	5 1/2x 5/8	5 1/2x 5/8	16
20	3x 3/4	27 1/2	25	4	4 1/2	1 1/2	1 1/2	24 1/8	21 5/8	11 5/16	10 1/16	1 1/2	1 1/2	3/8	3/8	1 3/4	1 3/4	2 1/4	2 1/2	1	11 1/16	5 1/2x 5/8	5 1/2x 5/8	20
24	RODS AND CLAMPS NOT ALLOWED.																							24

NOTE:
ALL DIMENSIONS IN INCHES

NOTE:
NOT FOR USE WITH 18" & 20" D.I. COMPACT FITTINGS.

DENVER WATER
1600 West 12th Avenue · Denver, Colorado 80204
Phone(303)628–6000 · Telecopier No.(303)628–6851

CLAMP DETAILS & DIMENSIONS FOR USE WITH C.I. & D.I. FITTINGS ONLY

Scale: NONE | Date: JUNE 1995

Drawn: C.B.B. | Tr: | Ck:

Approved: | Dr. 127 No. 35