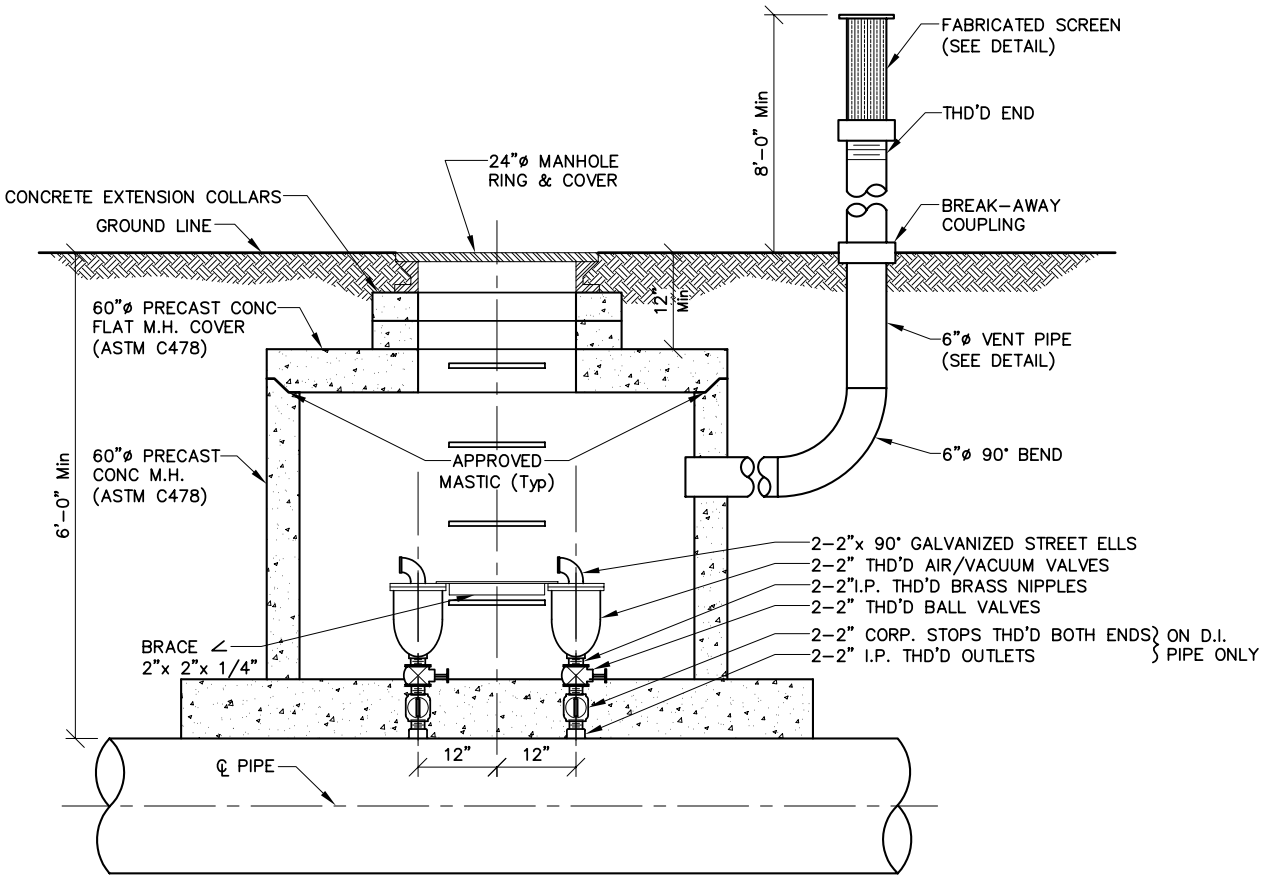

ELEVATION

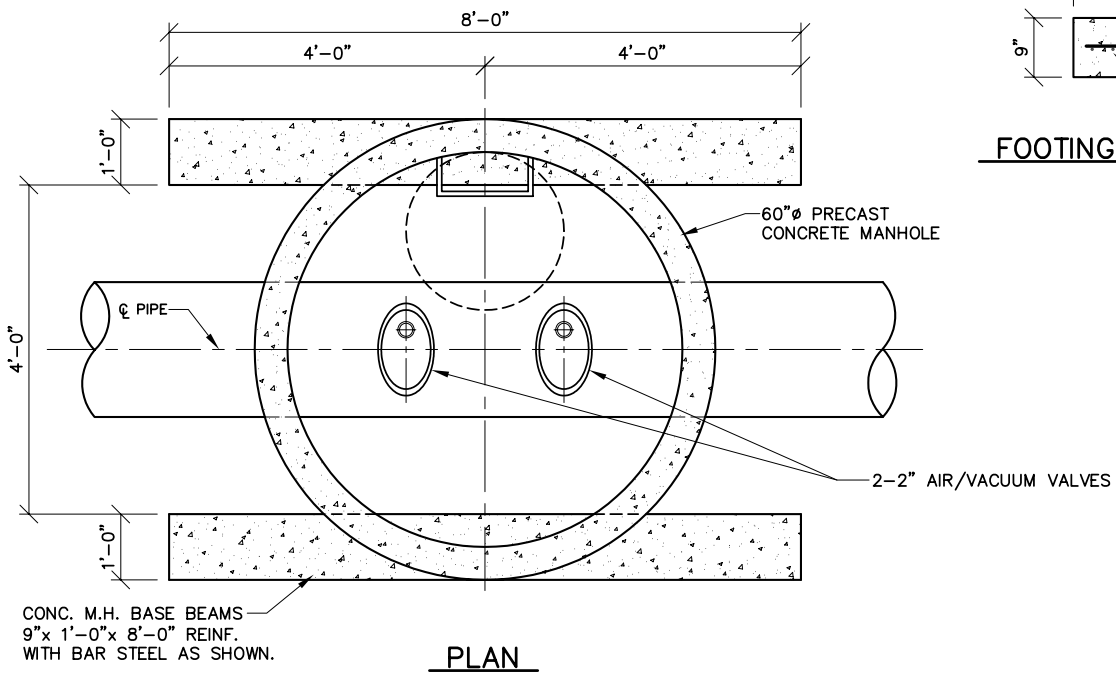

PLAN

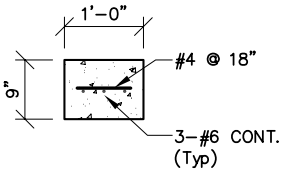

FOOTING DETAIL

NOTES:

1. USE 2" AIR VALVE ASSEMBLY ON 30" OR SMALLER PIPE.
2. THE DISTANCE BETWEEN RUNGS, CLEATS, AND STEPS SHALL NOT EXCEED 12 INCHES AND SHALL BE UNIFORM THROUGHOUT THE LENGTH OF THE LADDER.
3. LADDER RUNGS ARE REQUIRED IN PRECAST CONCRETE MANHOLES.

DENVER WATER
1600 West 12th Avenue · Denver, Colorado 80204
Phone(303)628-6000 · Telecopier No.(303)628-6851

2" AIR/VACUUM VALVE INSTALLATION

Scale: NONE		Date: JUNE 1995	
Drawn: C.B.B.	Tr:	Ck:	
Approved:		Dr. 127	No. 35