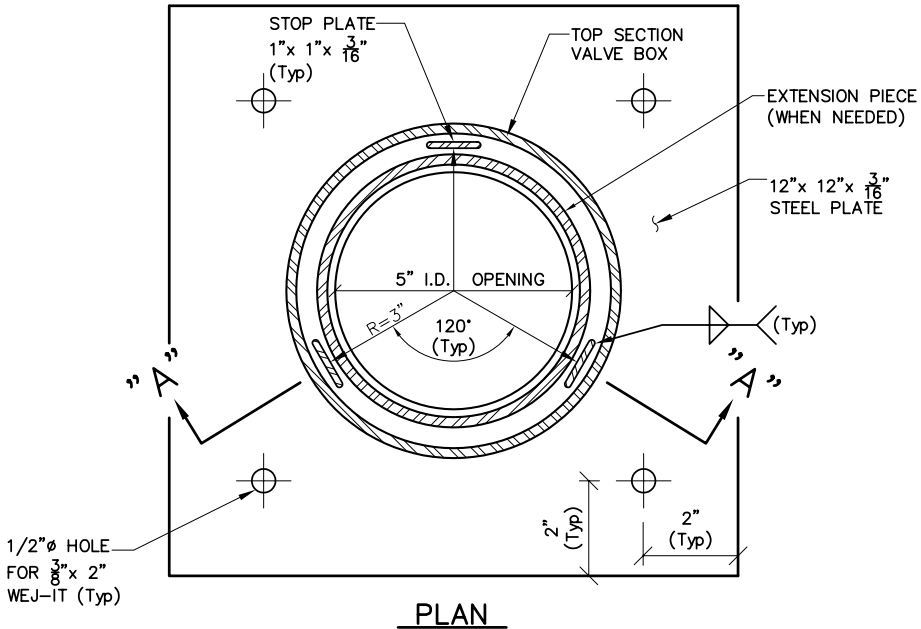

PLAN

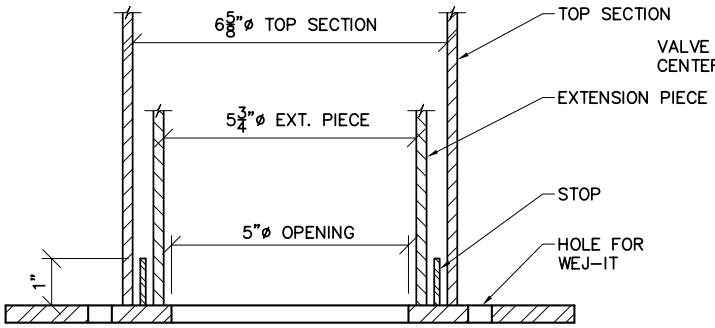

SECTION "A"–"A"

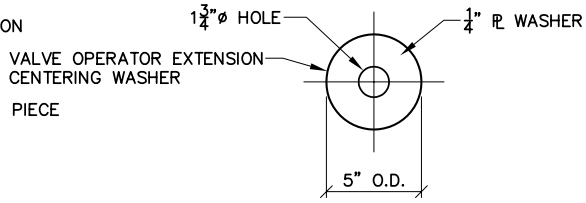

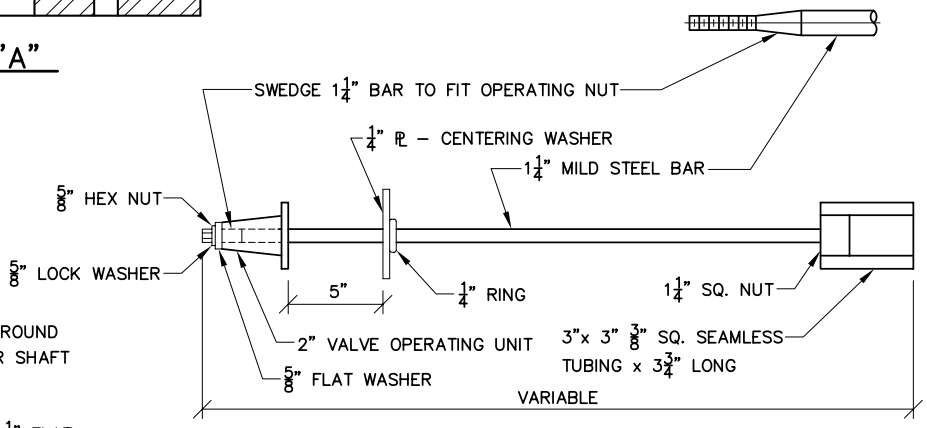

VALVE OPERATOR EXTENSION

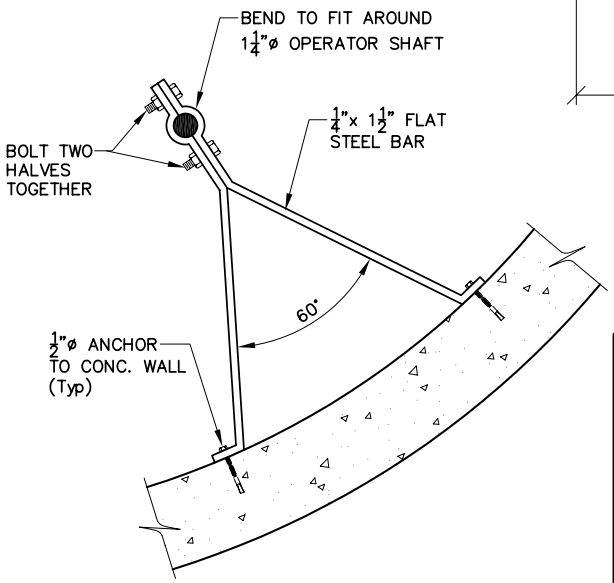

EXTENSION GUIDE

DENVER WATER
1600 West 12th Avenue • Denver, Colorado 80204
Phone(303)628–6000 • Telecopier No.(303)628–6851

VALVE BOX SUPPORT PLATE AND VALVE OPERATOR EXTENSION GUIDE

Scale: NONE	Date: JUNE 1995
Drawn: C.B.B. Tr:	Ck:
Approved:	Dr. 127 No. 35

REVISED 5–2002