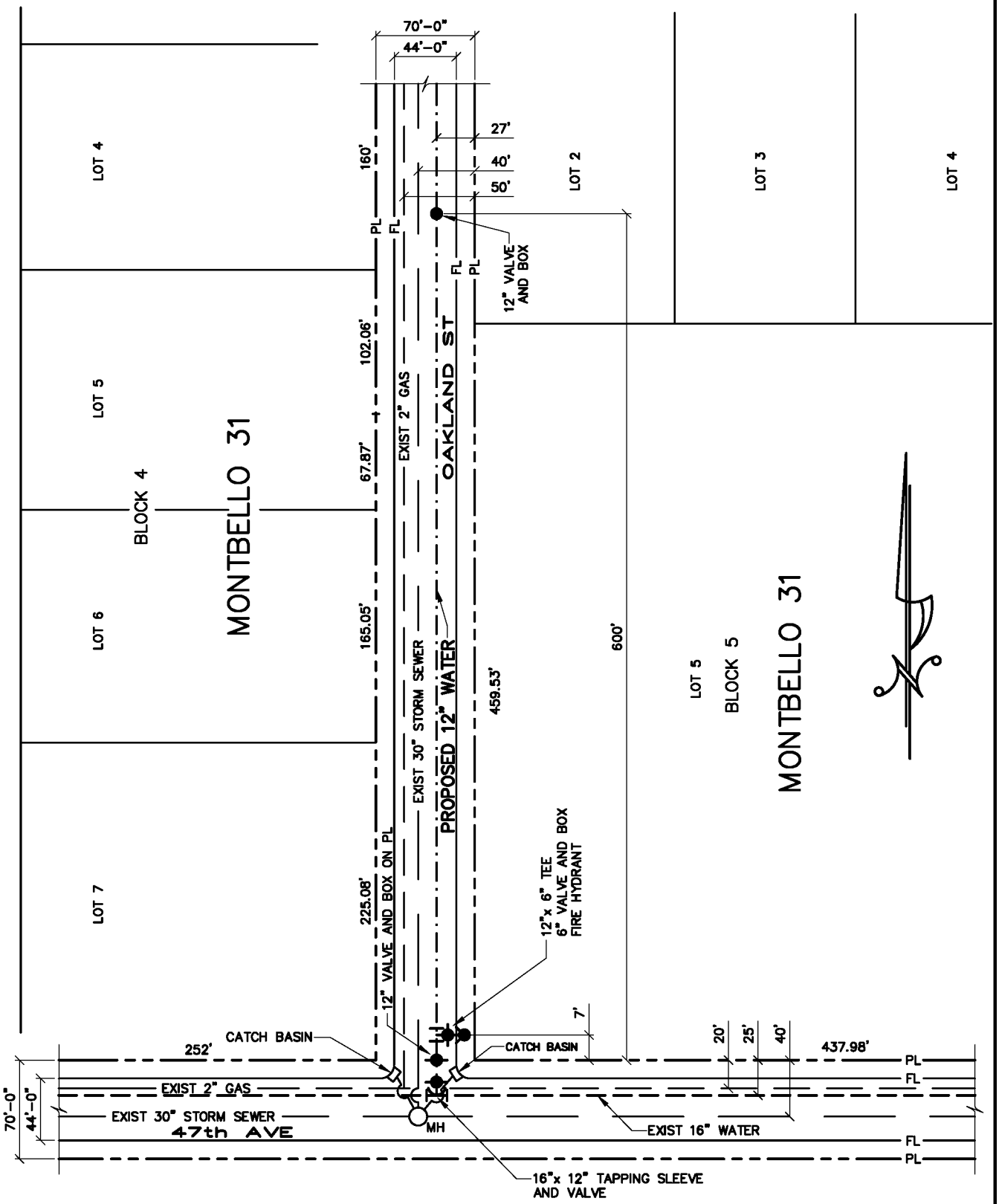

TYPICAL PLAN

NOTES:

1. SEE "TYPICAL STREET CROSS SECTION AND TYPICAL STREET CENTERLINE PROFILE" SHEET 2.
2. ALL FIRE HYDRANTS TO BE LOCATED AT POINTS OTHER THAN CORNER INTERSECTIONS SHALL BE INSTALLED AT A LOT LINE EXTENDED.

DENVER WATER
1600 West 12th Avenue · Denver, Colorado 80204
Phone(303)628-6000 · Telecopier No.(303)628-6851

WATER DISTRIBUTION SYSTEM TYPICAL PLAN

Scale: NONE		Date: JUNE 1995	
Drawn: C.B.B.	Tr:	Ck:	
Approved:		Dr. 127	No. 35

REVISED 2004

SHEET 1

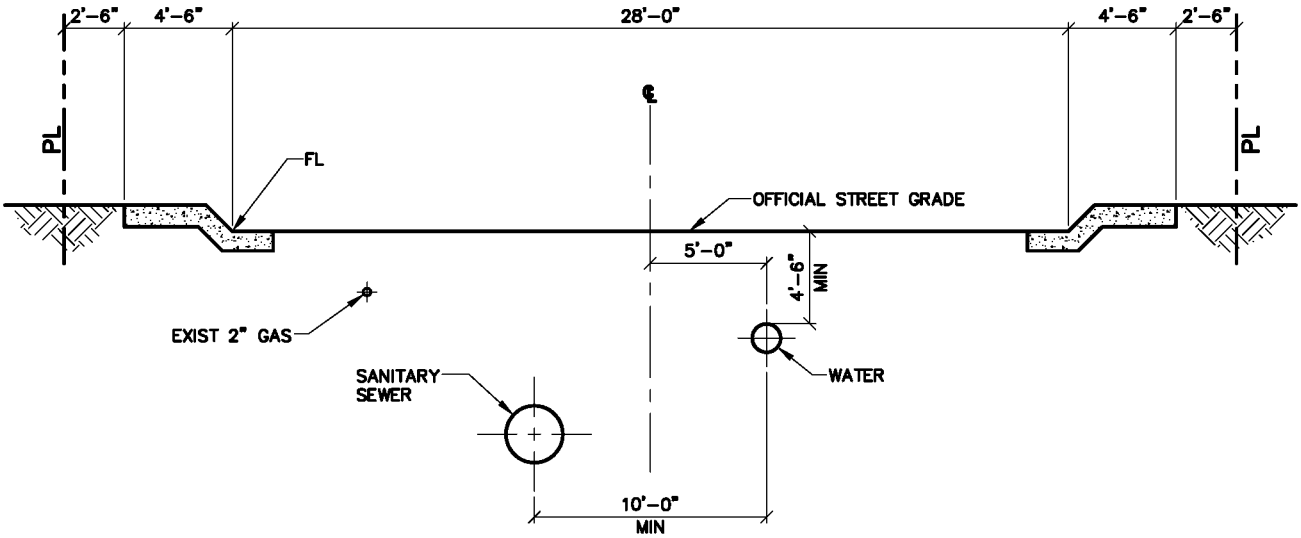

TYPICAL STREET CROSS SECTION

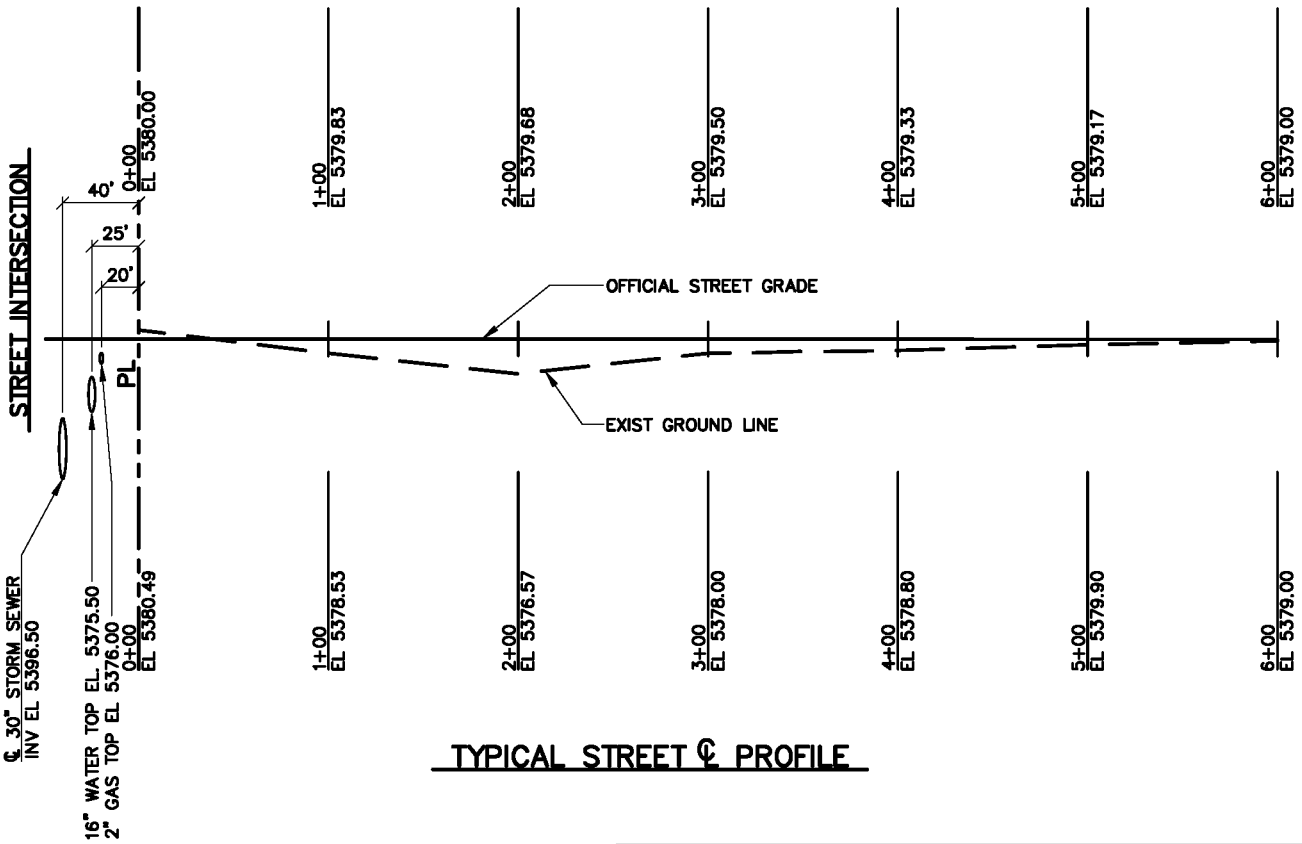

TYPICAL STREET ℄ PROFILE

DENVER WATER
1600 West 12th Avenue • Denver, Colorado 80204
Phone(303)628-6000 • Telecopier No.(303)628-6851

TYPICAL STREET CROSS SECTION AND STREET CENTERLINE PROFILE

Scale: NONE	Date: JUNE 1995	
Drawn: C.B.B.	Tr:	Ck:
Approved:	Dr. 127	No. 35

REVISED 2004

SHEET 2

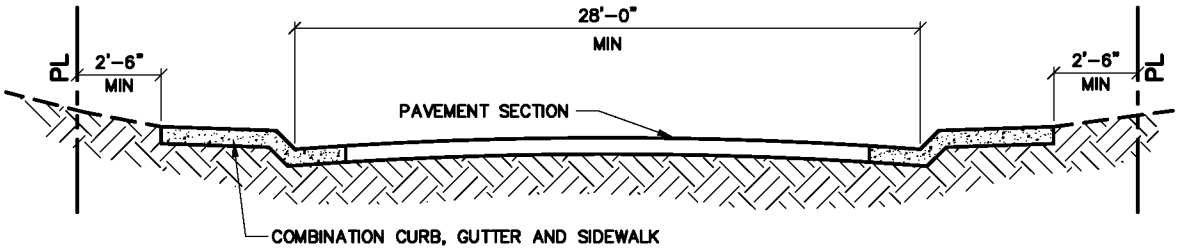

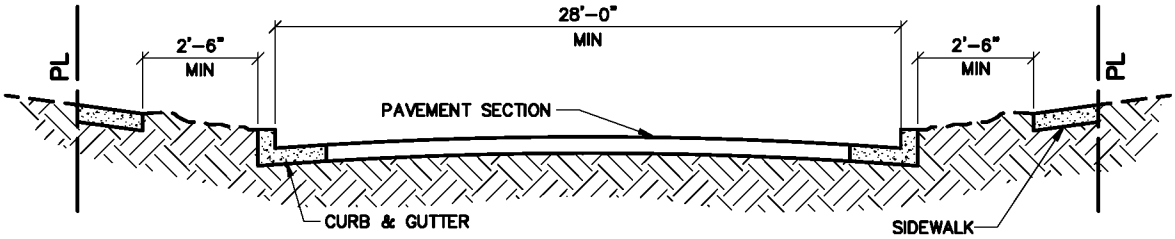

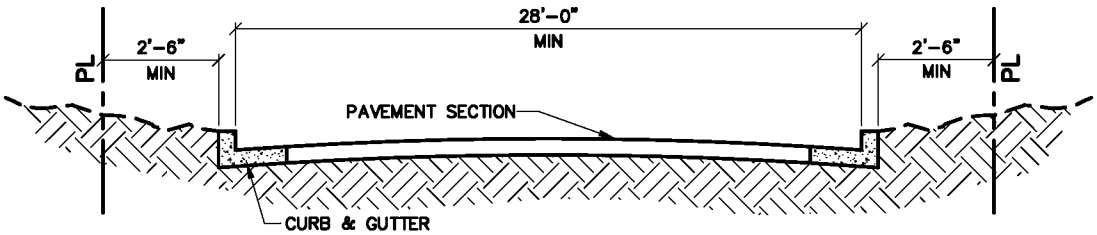

NOTE:
FOR 16" AND 20" MAINS SEE 9.08.

DENVER WATER
1600 West 12th Avenue • Denver, Colorado 80204
Phone(303)628-6000 • Telecopier No.(303)628-6851

TYPICAL STREET CROSS SECTION PUBLIC STREET

Scale: NONE		Date: JUNE 1995	
Drawn: C.B.B.	Tr:	Ck:	
Approved:		Dr. 127	No. 35

REVISED 2004

SHEET 3

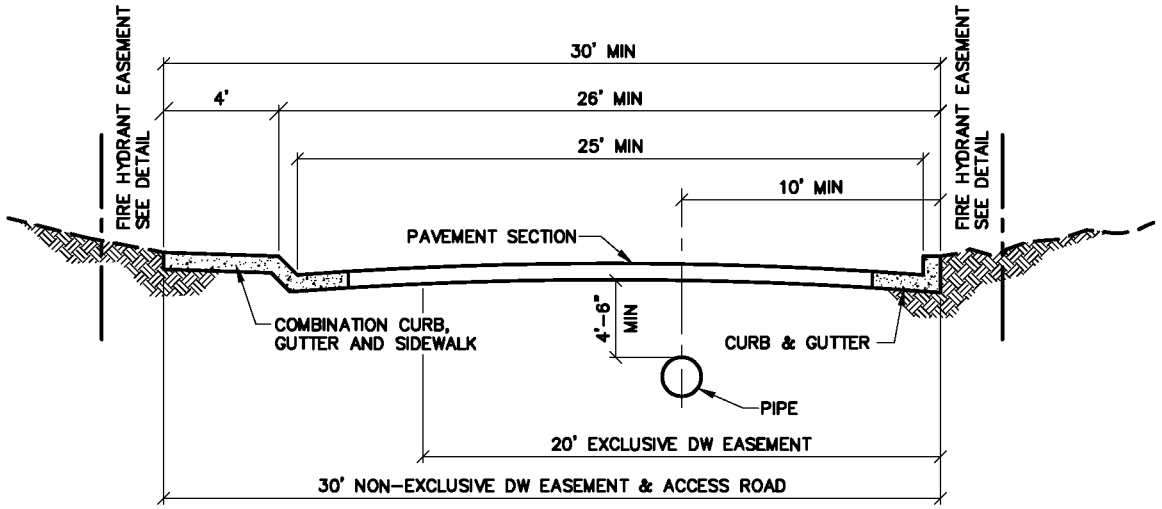

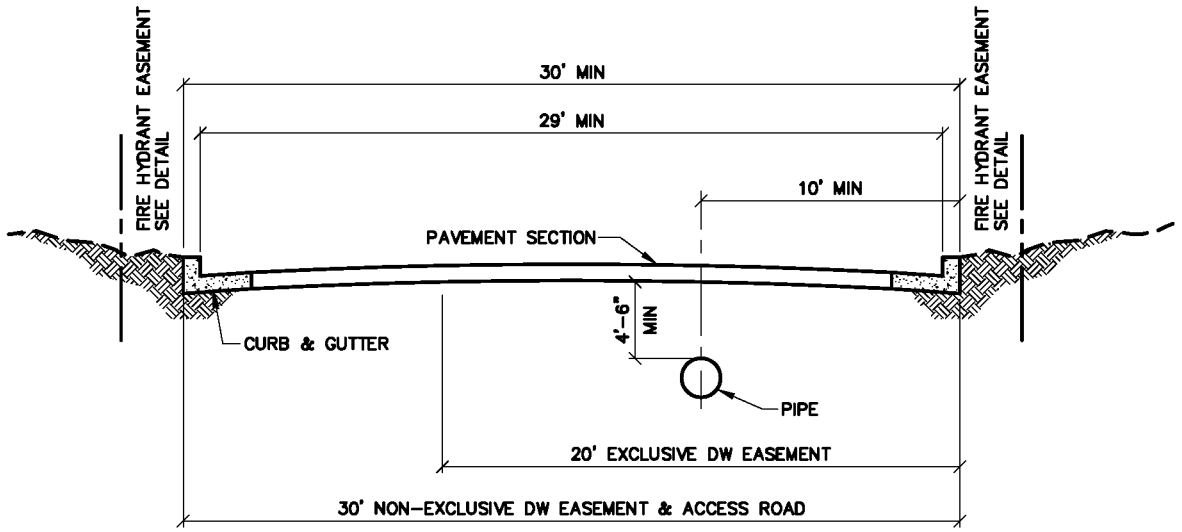

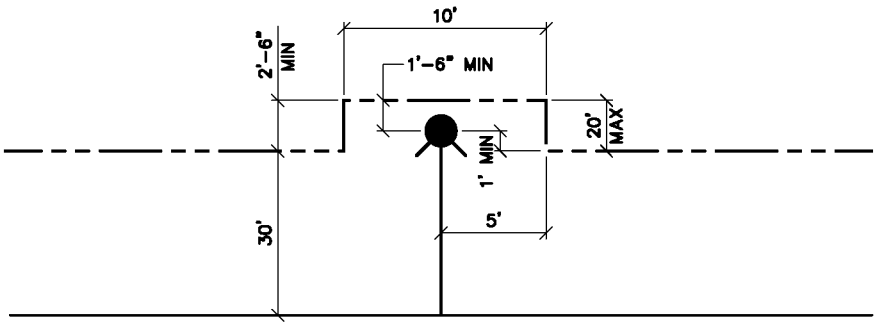

FIRE HYDRANT EASEMENT DETAIL

NOTE:
FOR 16" AND 20" MAINS SEE 9.08.

DENVER WATER
1600 West 12th Avenue • Denver, Colorado 80204
Phone(303)628-6000 • Telecopier No.(303)628-6851

TYPICAL STREET CROSS SECTION PRIVATE STREET

Scale: NONE	Date: JUNE 1995	
Drawn: C.B.B.	Tr:	Ck:
Approved:	Dr. 127	No. 35

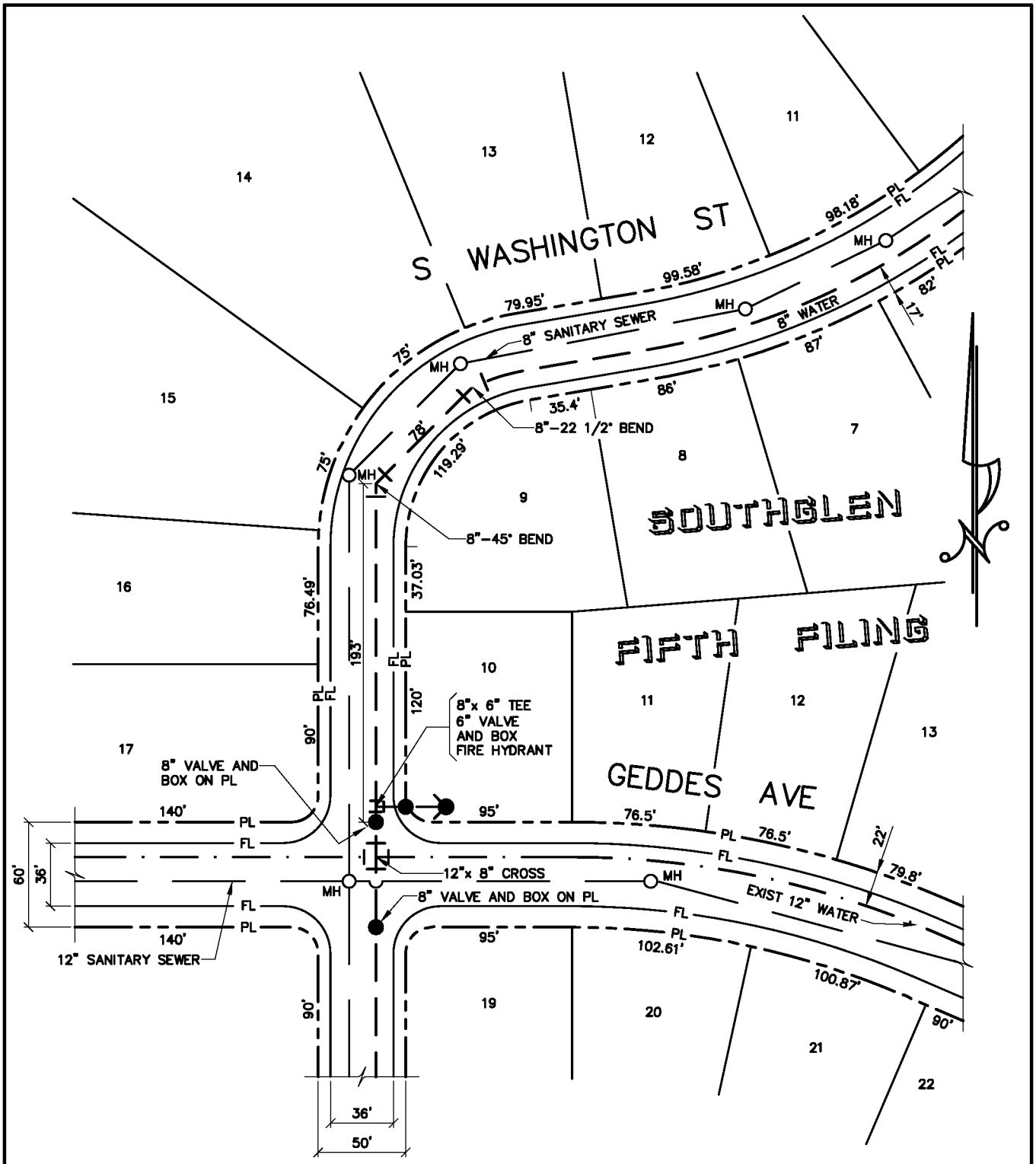

TYPICAL PLAN FOR CURVED STREETS

DENVER WATER
1600 West 12th Avenue • Denver, Colorado 80204
Phone(303)628-6000 • Telecopier No.(303)628-6851

WATER DISTRIBUTION SYSTEM
TYPICAL PLAN FOR CURVED STREETS

Scale: NONE	Date: JUNE 1995	
Drawn: C.B.B.	Tr:	Ck:
Approved:	Dr. 127	No. 35

REVISED 2004

SHEET 5

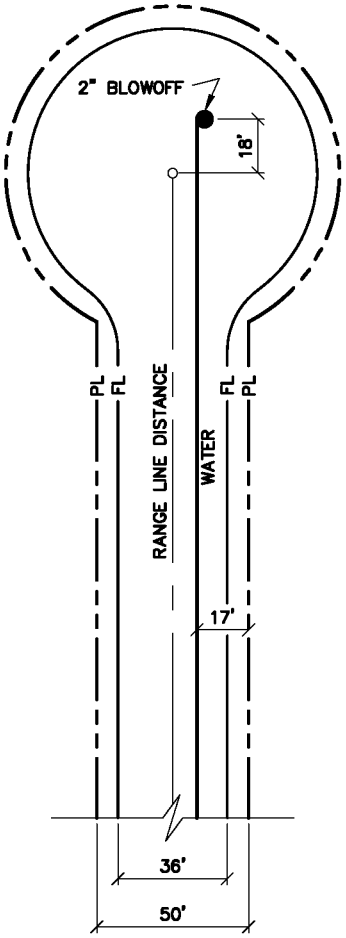

"A"

"A"–STRAIGHT LINE CUL–DE–SAC:
LAY PIPE TO 18' BEYOND THE CENTER (RADIUS POINT) OF CUL–DE–SAC.

"B"–OFFSET CUL–DE–SAC:
LAY PIPE TO 5' BEYOND PI THEN TO 18' BEYOND THE CENTER (RADIUS POINT) OF CUL–DE–SAC.

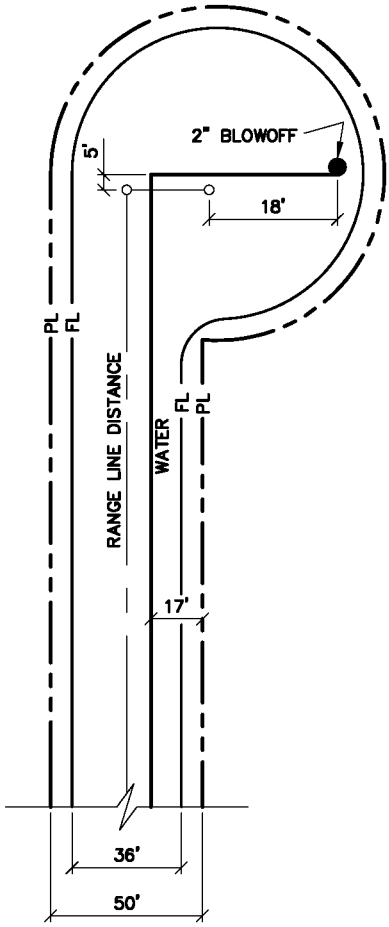

"B"

TYPICAL PLAN FOR CUL–DE–SACS

DENVER WATER
1600 West 12th Avenue • Denver, Colorado 80204
Phone(303)628–6000 • Telecopier No.(303)628–6851

WATER DISTRIBUTION SYSTEM TYPICAL PLAN FOR CUL–DE–SACS		
Scale: NONE	Date: JUNE 1995	
Drawn: C.B.B.	Tr:	Ck:
Approved:	Dr. 127	No. 35

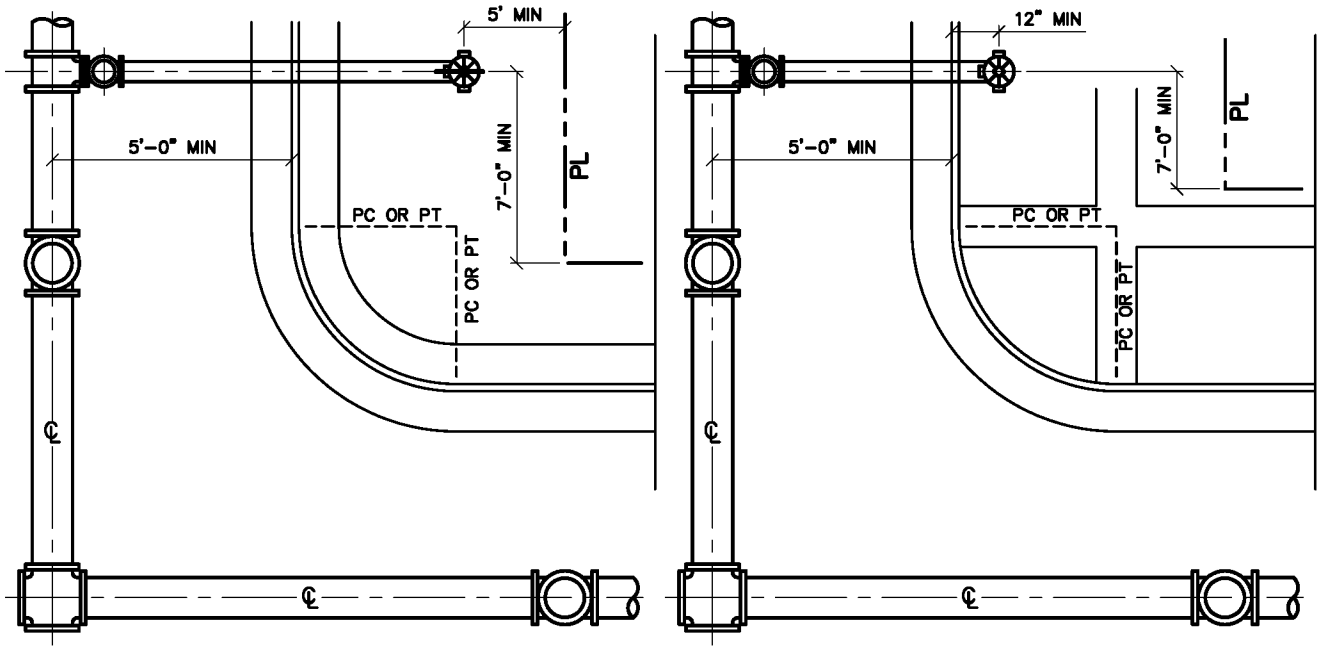

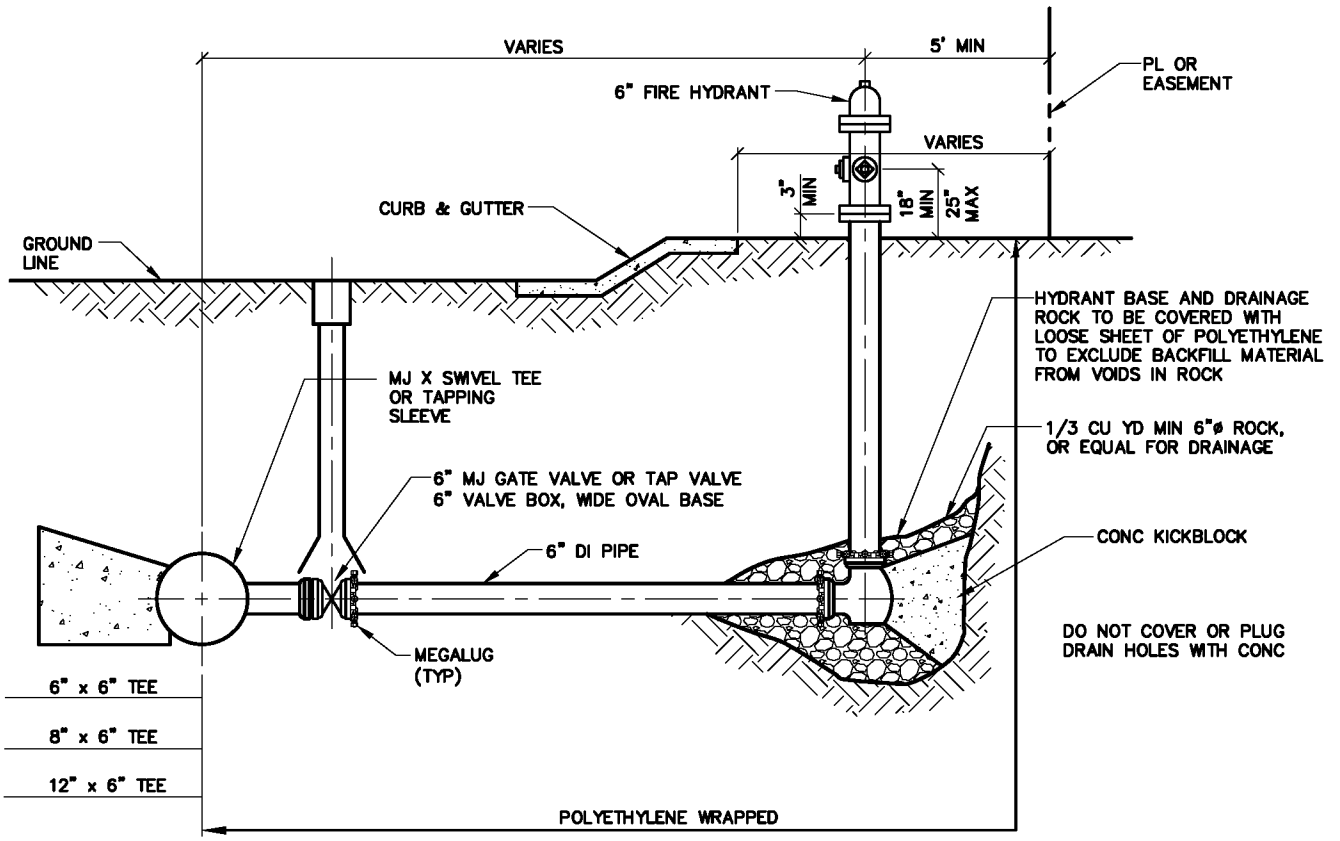

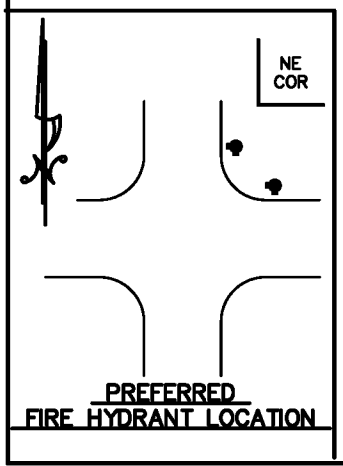

NOTE:

NO HORIZONTAL OR VERTICAL BENDS ARE ALLOWED IN FIRE HYDRANT BRANCH OR SPRINKLER LINES. FOR EXCEPTIONS SEE 5.04 (a), (b).

DENVER WATER
1600 West 12th Avenue • Denver, Colorado 80204
Phone Tel No.

PLAN, PROFILE & LOCATIONS FOR FIRE HYDRANTS, MAINS & VALVES

Scale: NONE	Date: JUNE 1995	
Drawn: C.B.B.	Tr:	Ck:
Approved:	Dr. 127	No. 35

REVISED 2004

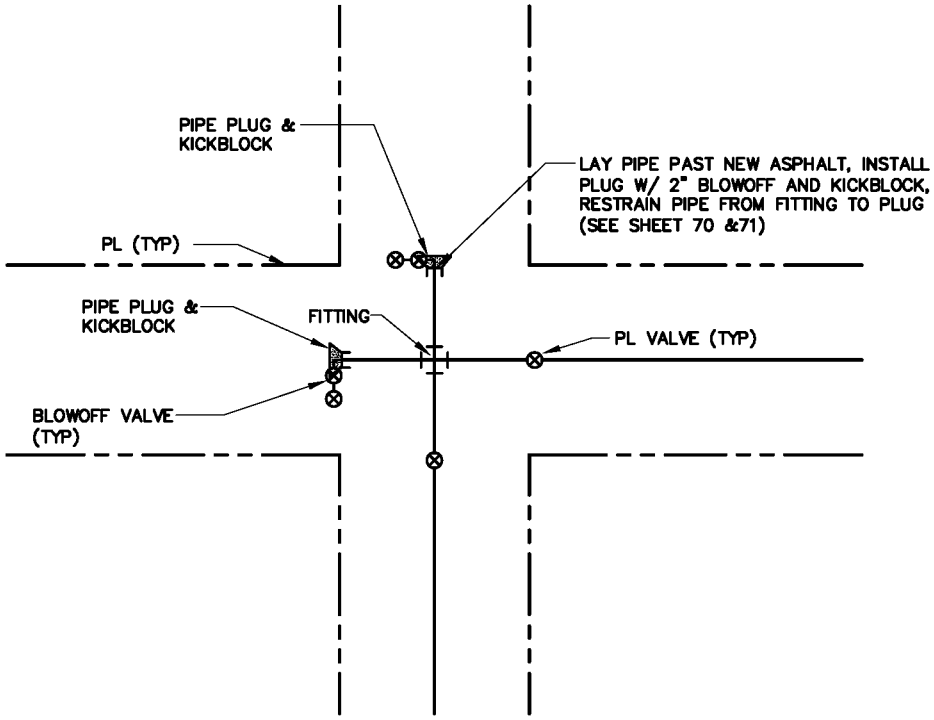

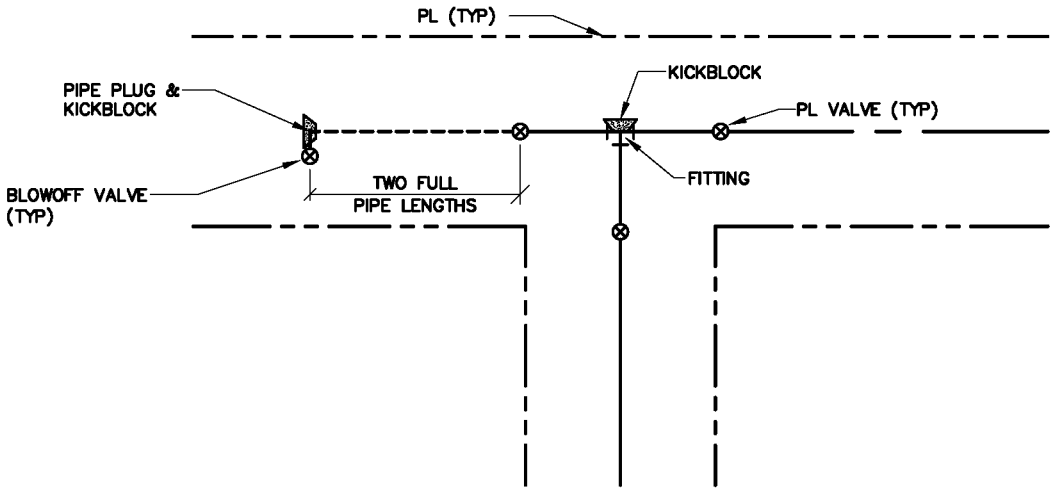

DENVER WATER
1600 West 12th Avenue • Denver, Colorado 80204
Phone(303)628-6000 • Telecopier No.(303)628-6851

PIPING AT STREET INTERSECTIONS FUTURE CONNECTIONS

Scale: NONE	Date: JUNE 1995	
Drawn: C.B.B.	Tr:	Ck:
Approved:	Dr. 127	No. 35

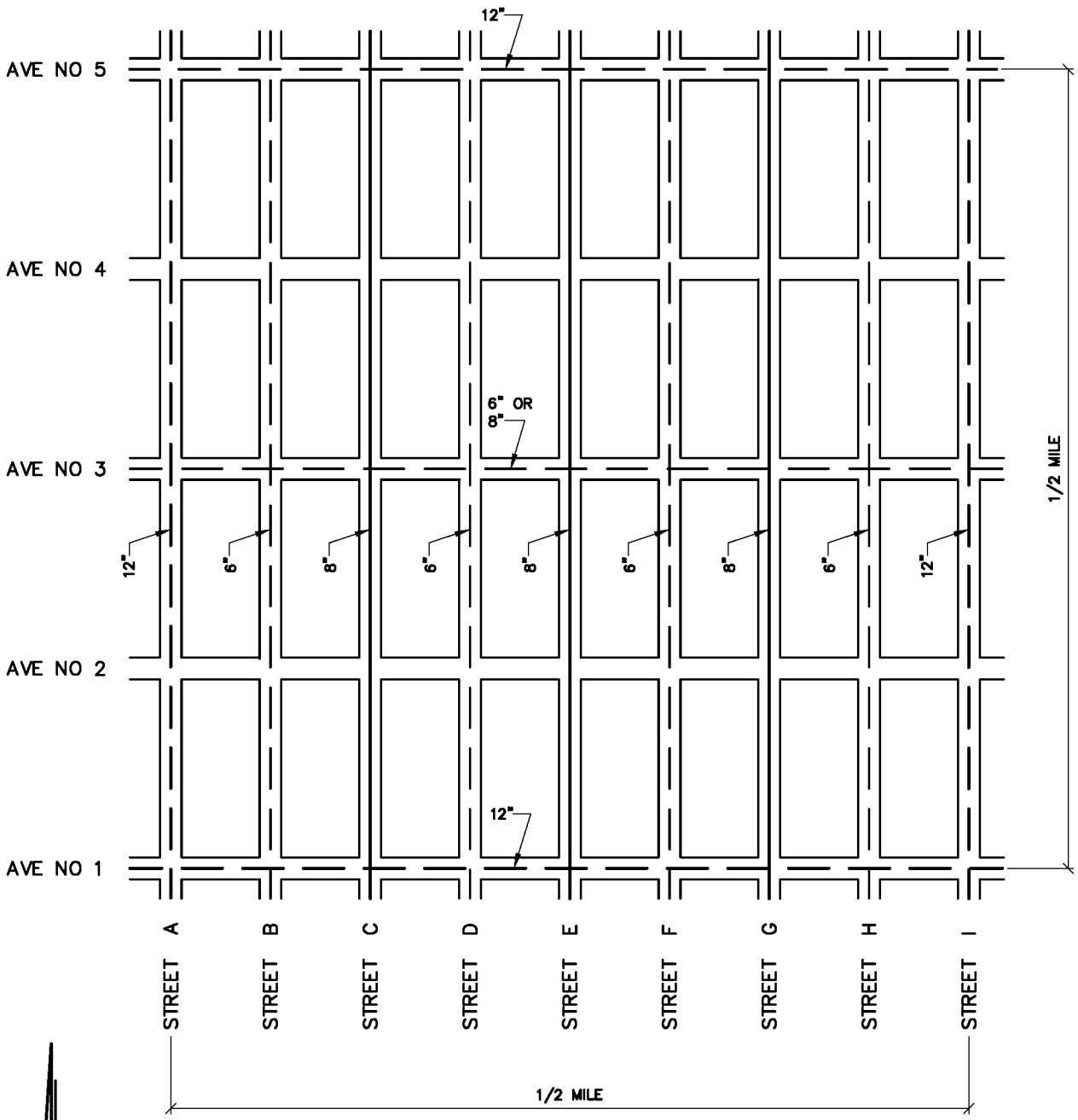

DENVER WATER
1600 West 12th Avenue • Denver, Colorado 80204
Phone(303)628-6000 • Telecopier No.(303)628-6851

TYPICAL QUARTER SECTION HYDRAULIC GRID SYSTEM

Scale: NONE	Date: JUNE 1995
Drawn: C.B.B.	Tr:	Ck:
Approved:	Dr. 127 No. 35

REVISED 2004

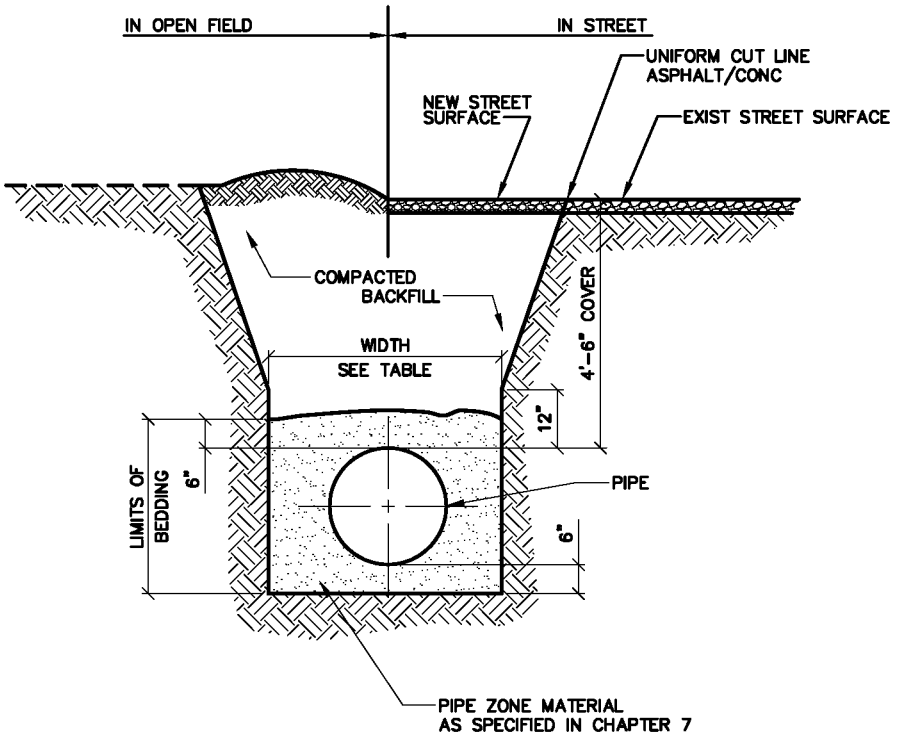

TYPICAL TRENCH SECTION

NOTES:

1. NEW STREET SURFACE SHALL COMPLY WITH LOCAL AUTHORITY JURISDICTION.
2. TRENCH WALLS TO BE SUPPORTED AS REQUIRED BY OSHA.
3. MIN COVER TO BE BELOW OFFICIAL STREET GRADE.

PIPE ø	MIN WIDTH	MAX WIDTH
4"	1'-4"	2'-4"
6"	1'-6"	2'-6"
8"	1'-8"	2'-8"
12"	2'-0"	3'-0"
16"	2'-4"	3'-4"
20"	2'-8"	3'-8"
24"	4'-0"	5'-0"

DENVER WATER
1600 West 12th Avenue • Denver, Colorado 80204
Phone(303)628-6000 • Telecopier No.(303)628-6851

TYPICAL TRENCH SECTION
PIPE PROTECTION

Scale: NONE | Date: JUNE 1995

Drawn: C.B.B. | Tr: | Ck:

Approved: | Dr. 127 No. 35

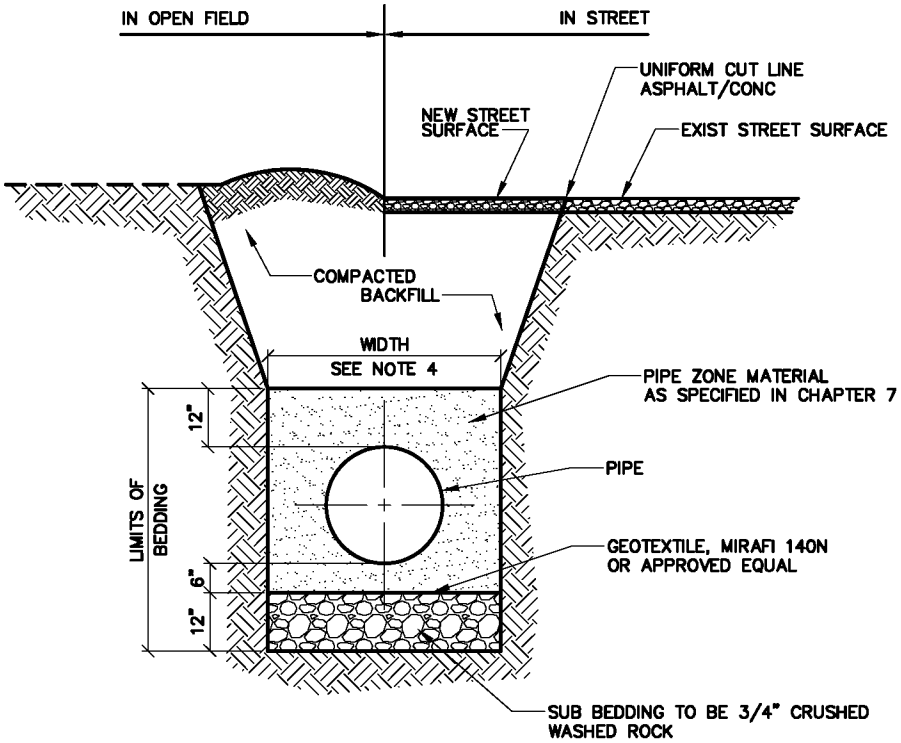

TYPICAL TRENCH SECTION

NOTES:

1. MIN COVER TO BE 4.5' BELOW OFFICIAL STREET GRADE.
2. TRENCH WALLS TO BE SUPPORTED AS REQUIRED BY OSHA.
3. PIPE SHALL BE BEDDED FROM 18" BELOW THE BOTTOM OF THE PIPE TO 12" ABOVE THE TOP OF THE PIPE.
4. TRENCH WIDTH SHALL NOT BE MORE THAN 16" NOR LESS THAN 12" WIDER THAN THE LARGEST OD OF PIPE.
5. COMPACTION SHALL BE IN ACCORDANCE WITH CHAPTER 7.
6. TAPPING SADDLES REQUIRED IN AREAS WHERE THE BEDDING SECTION IS USED.

DENVER WATER
1600 West 12th Avenue • Denver, Colorado 80204
Phone(303)628-6000 • Telecopier No.(303)628-6851

TYPICAL TRENCH SECTION FOR PIPELINES IN DIPPING BEDROCK

Scale: NONE	Date: JUNE 1995	
Drawn: C.B.B.	Tr:	Ck:
Approved:	Dr. 127	No. 35

NOTE:

PLUG SHALL BE MECHANICALLY RESTRAINED:

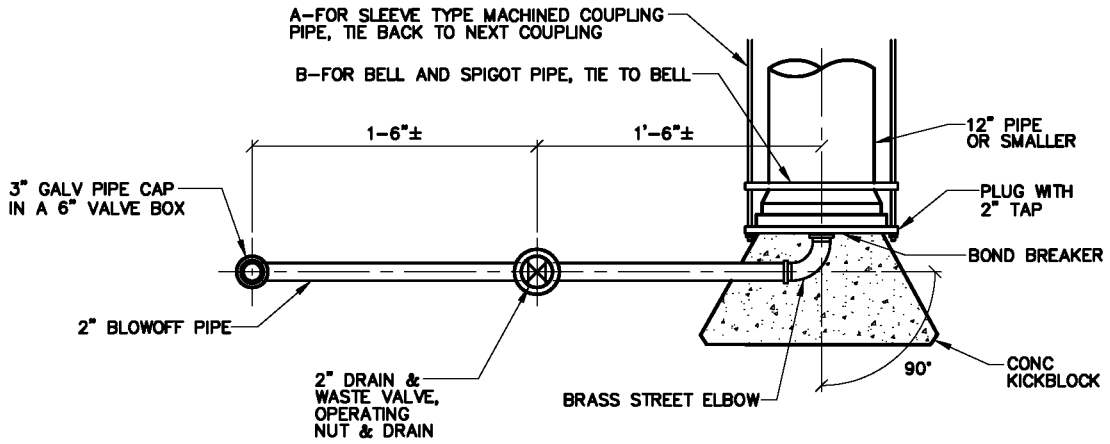

PLAN

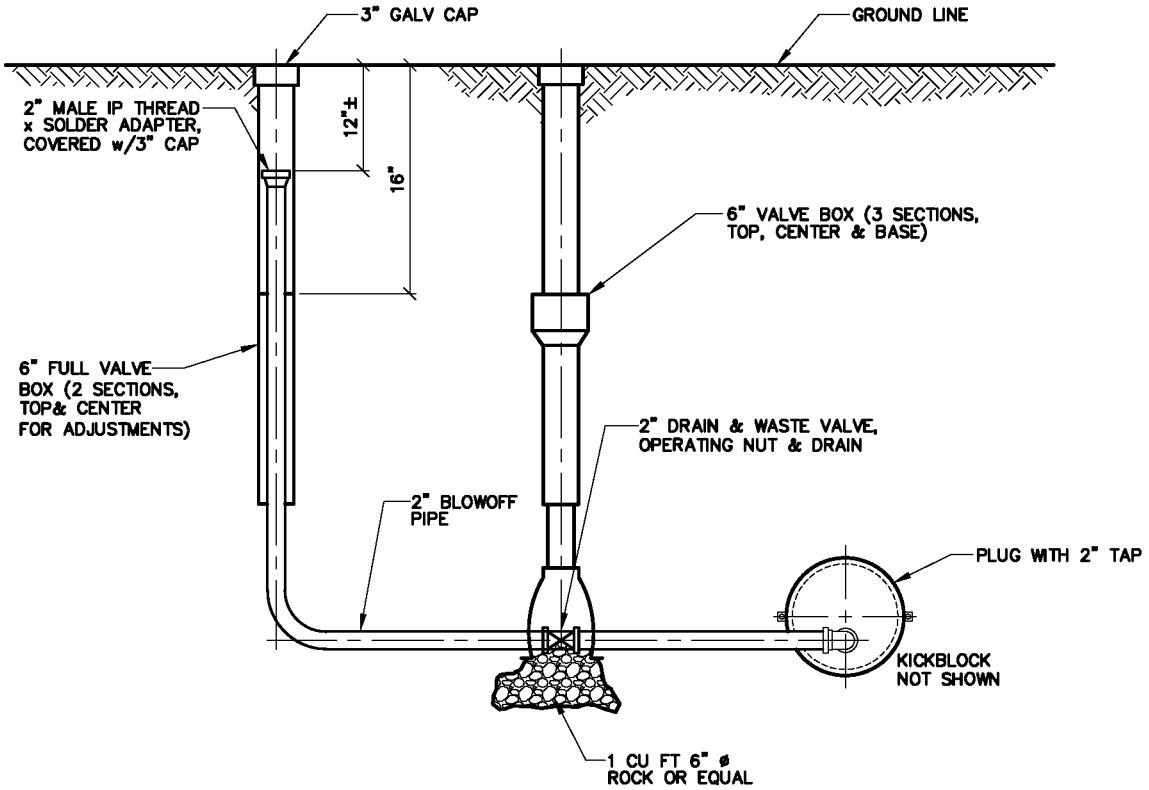

ELEVATION

NOTE:

BLOWOFF PIPE TO BE TYPE K SOFT COPPER OR BRASS.

DENVER WATER
1600 West 12th Avenue • Denver, Colorado 80204
Phone(303)628–6000 • Telecopier No.(303)628–6851

BLOWOFF INSTALLATION FOR 12" AND SMALLER PIPE

Scale: NONE	Date: JUNE 1995	
Drawn: C.B.B.	Tr:	Ck:
Approved:	Dr. 127	No. 35

REVISED 2004

SHEET 12

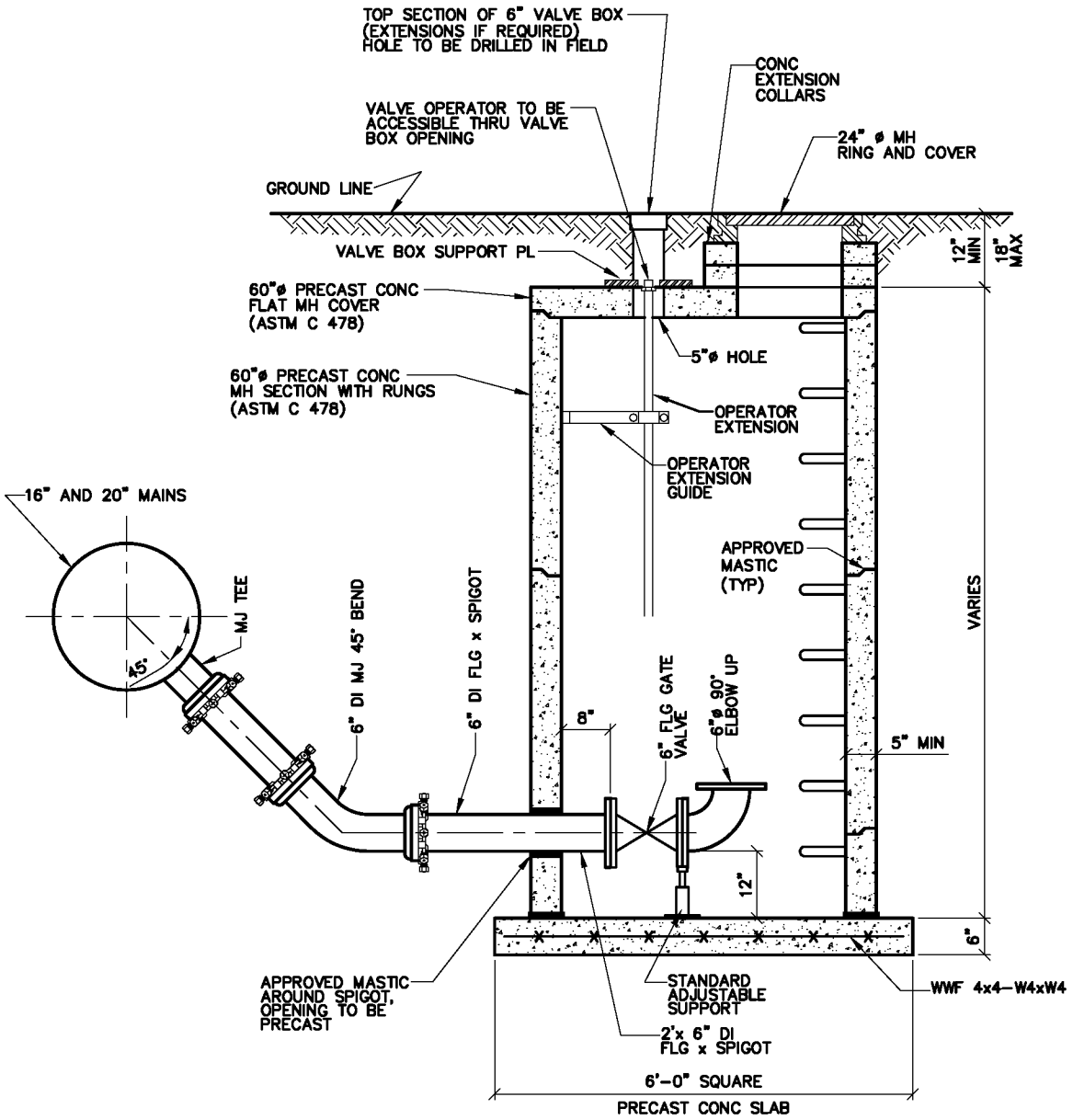

ELEVATION

NOTE:

THIS INSTALLATION MAY BE REPLACED BY A FIRE HYDRANT WHERE APPROVED BY DENVER WATER FOR 16" AND 20" MAINS.

DENVER WATER
1600 West 12th Avenue • Denver, Colorado 80204
Phone(303)628-6000 • Telecopier No.(303)628-6851

TRANSMISSION MAIN BLOWOFF INSTALLATION

Scale: NONE	Date: JUNE 1995	
Drawn: C.B.B.	Tr:	Ck:
Approved:	Dr. 127	No. 35

REVISED 2004

SHEET 13

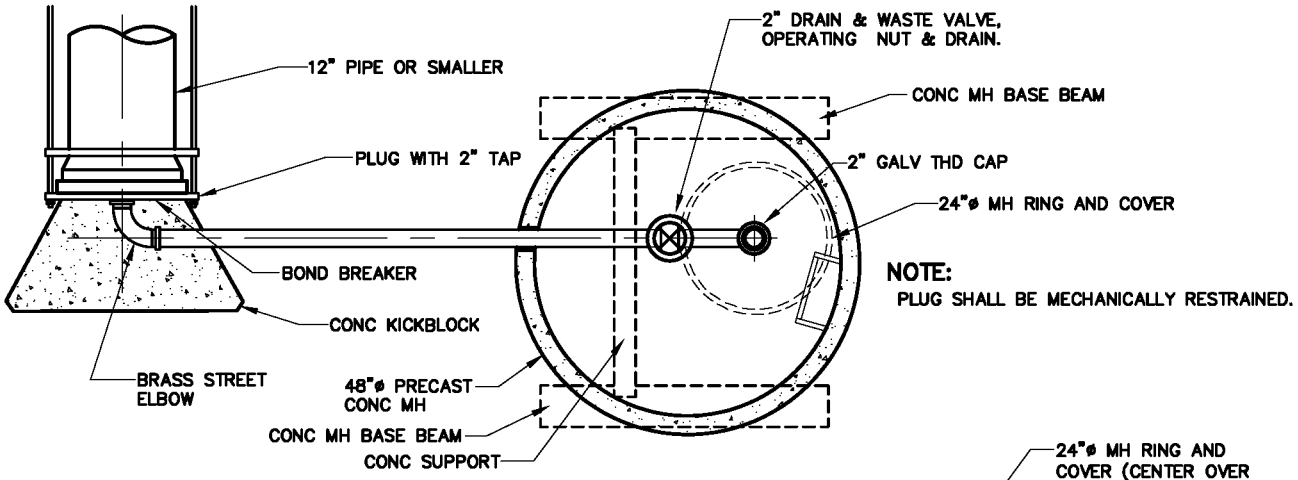

NOTE:
PLUG SHALL BE MECHANICALLY RESTRAINED.

PLAN

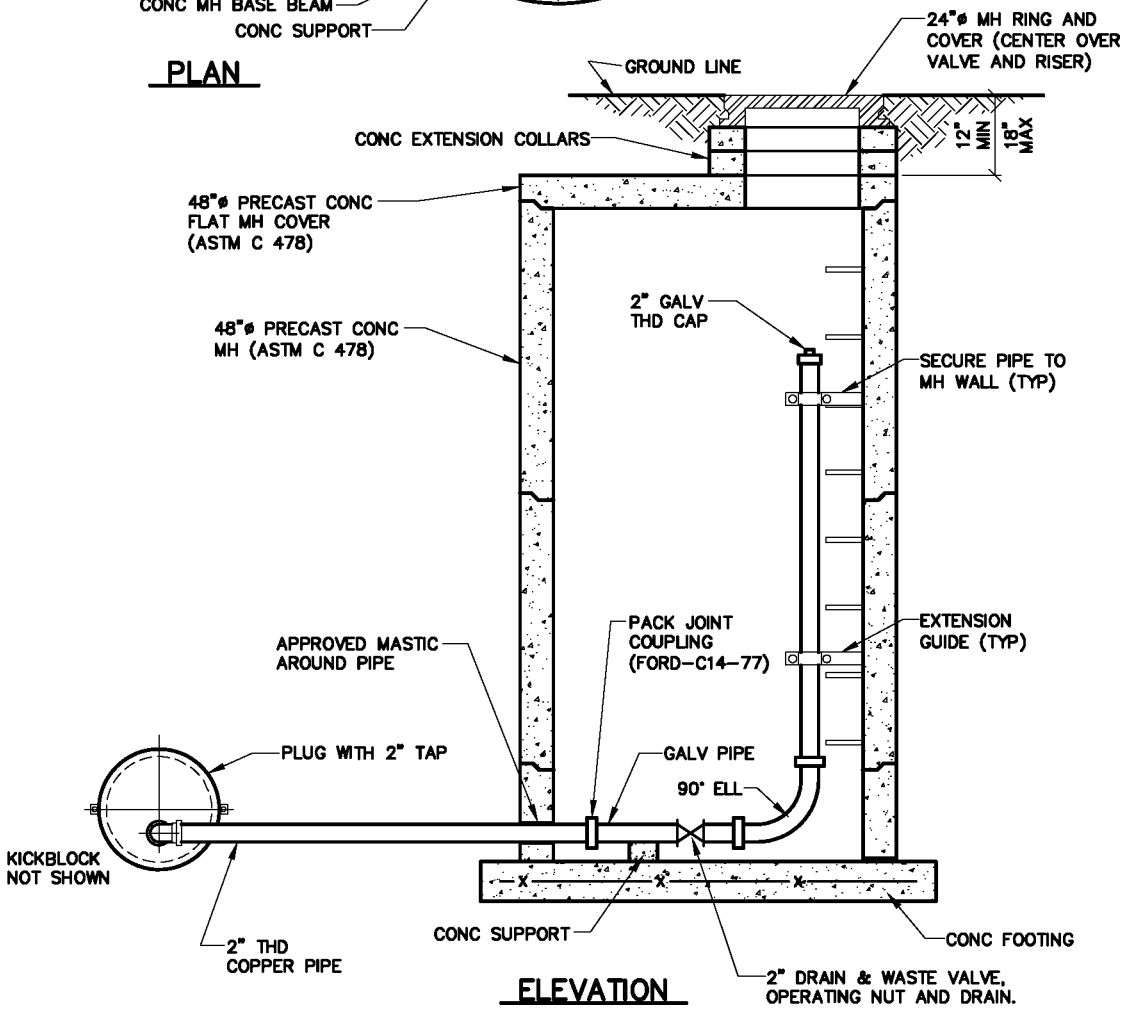

ELEVATION

NOTE:
WITH PRIOR APPROVAL OF DENVER WATER, A FIRE HYDRANT MAY BE SUBSTITUTED FOR THE PERMANENT 2" BLOWOFF. SEE SHEET 15 FOR EXTENSION GUIDE.

DENVER WATER
1600 West 12th Avenue • Denver, Colorado 80204
Phone(303)628-6000 • Telecopier No.(303)628-6851

PERMANENT 2" BLOWOFF IN 48" MANHOLE

Scale: NONE	Date: JUNE 1995	
Drawn: C.B.B.	Tr:	Ck:
Approved:	Dr. 127	No. 35

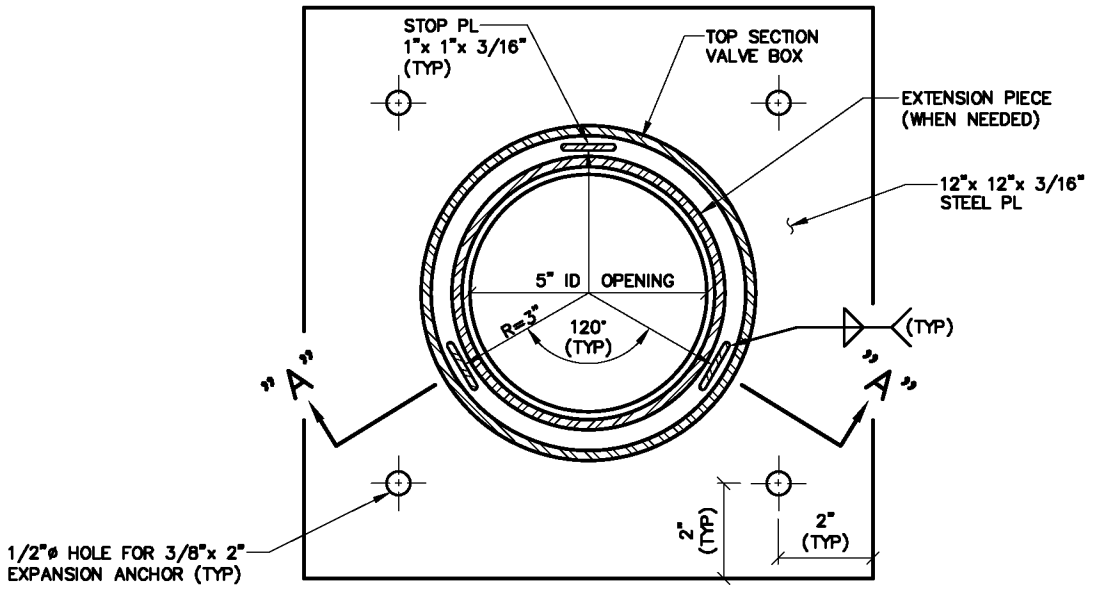

PLAN

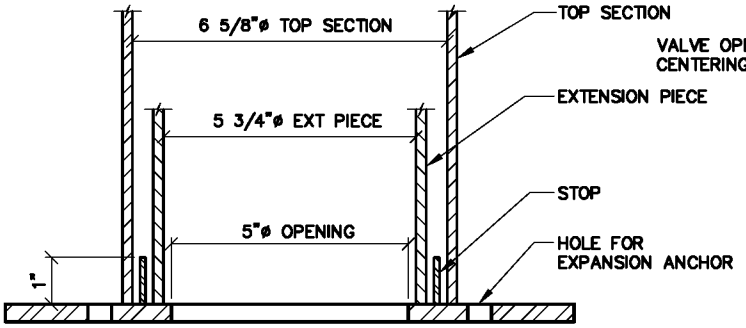

SECTION "A"–"A"

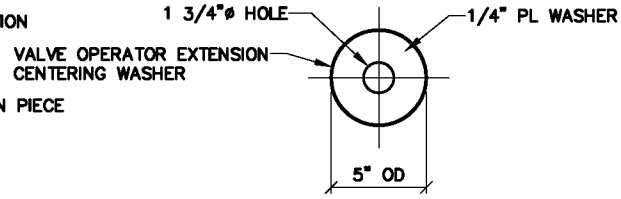

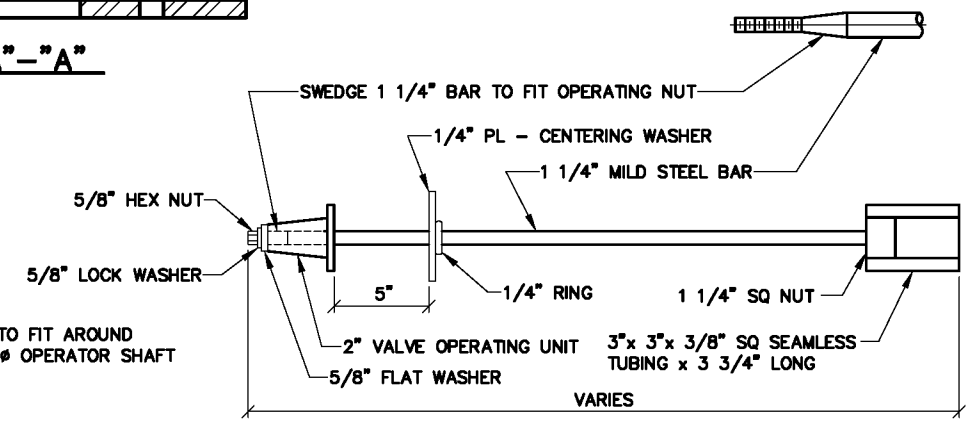

VALVE OPERATOR EXTENSION

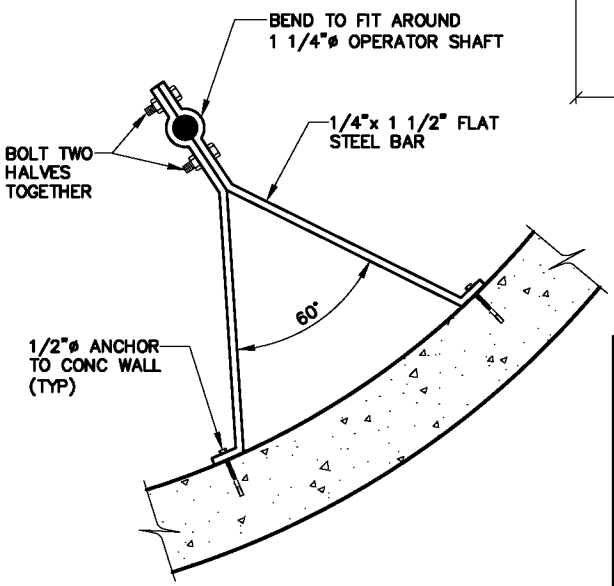

EXTENSION GUIDE

DENVER WATER
1600 West 12th Avenue • Denver, Colorado 80204
Phone(303)628–6000 • Telecopier No.(303)628–6851

VALVE BOX SUPPORT PLATE AND VALVE OPERATOR EXTENSION GUIDE

Scale: NONE	Date: JUNE 1995	
Drawn: C.B.B.	Tr:	Ck:
Approved:	Dr. 127	No. 35

REVISED 2004

SHEET 15

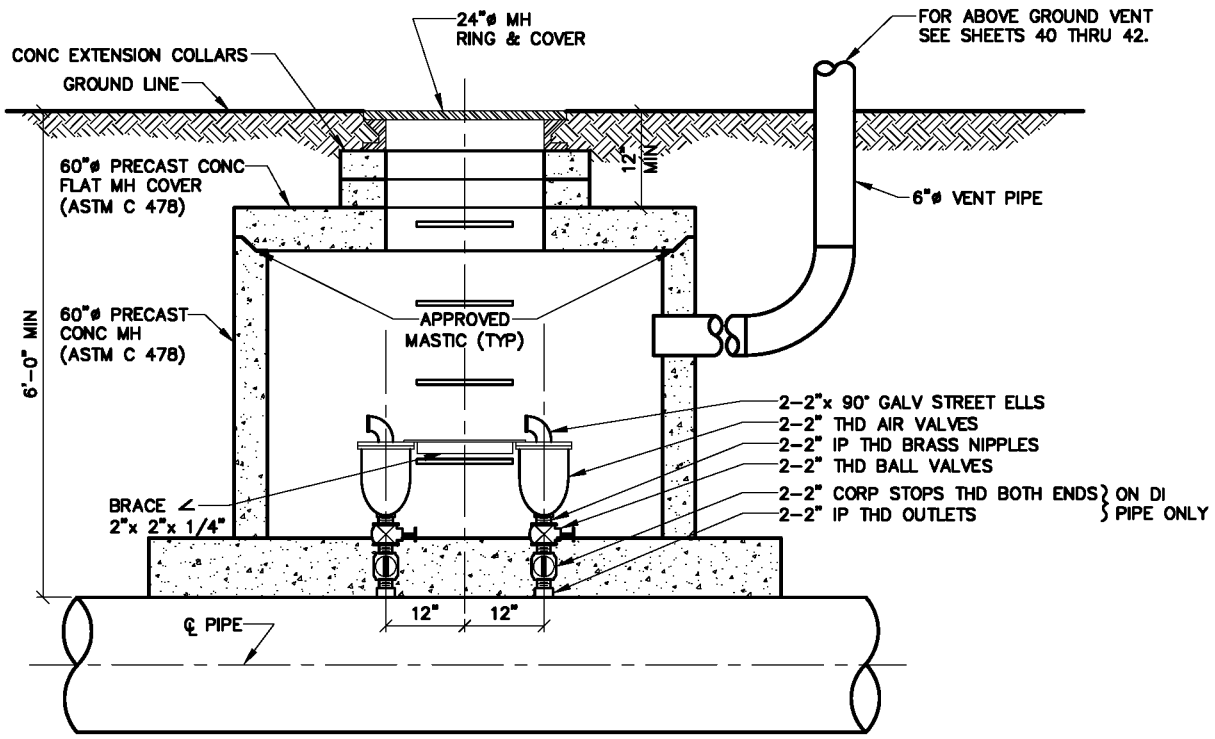

ELEVATION

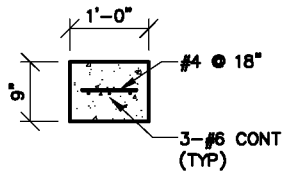

FOOTING DETAIL

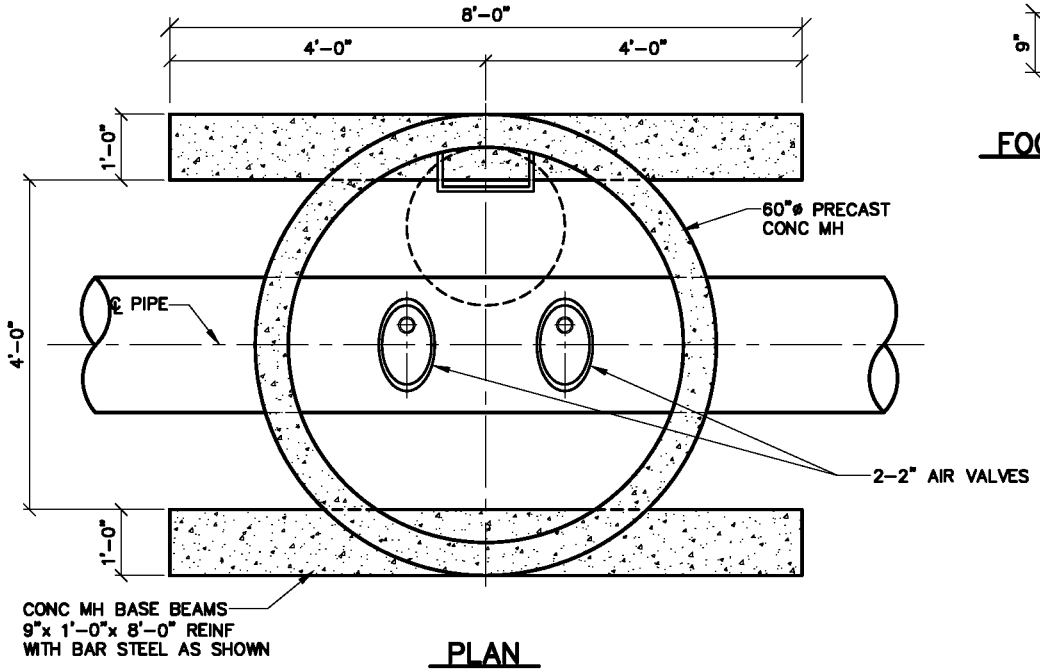

PLAN

NOTES:

1. USE 2" AIR VALVE ASSEMBLY ON 30" OR SMALLER PIPE.
2. THE DISTANCE BETWEEN RUNGS, CLEATS, AND STEPS SHALL NOT EXCEED 12 INCHES AND SHALL BE UNIFORM THROUGHOUT THE LENGTH OF THE LADDER.
3. LADDER RUNGS ARE REQUIRED IN PRECAST CONC MH.
4. FOR MH INFORMATION SEE SHEET 82.

DENVER WATER
1600 West 12th Avenue • Denver, Colorado 80204
Phone(303)628-6000 • Telecopier No.(303)628-6851

2" AIR VALVE ASSEMBLY

Scale: NONE		Date: JUNE 1995	
Drawn: C.B.B.	Tr:	Ck:	
Approved:		Dr. 127	No. 35

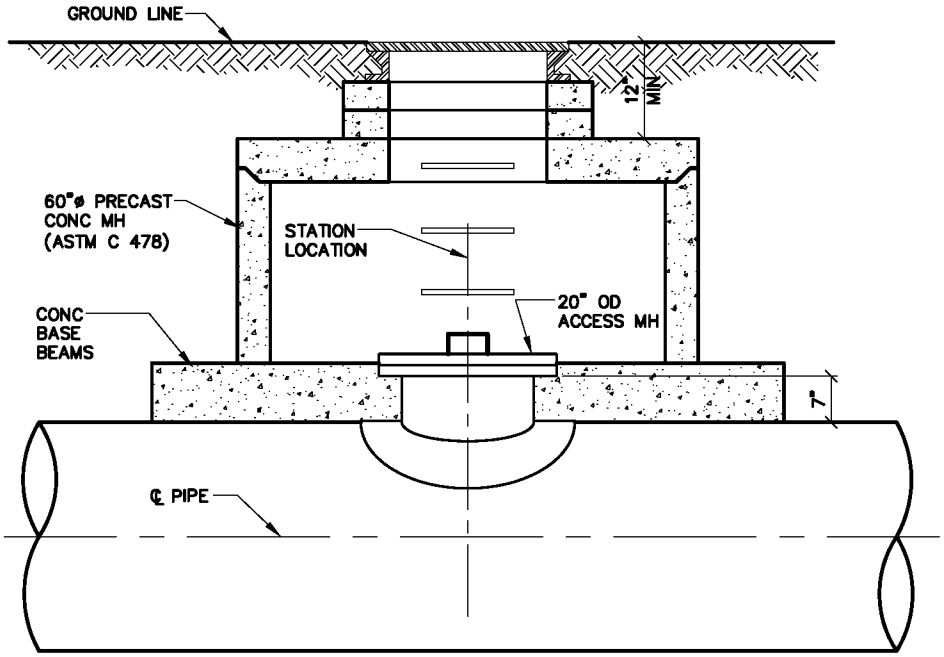

ACCESS MANHOLE

NOTE:
USE 2" AIR VALVE ASSEMBLY OF 30" OR SMALLER PIPE.

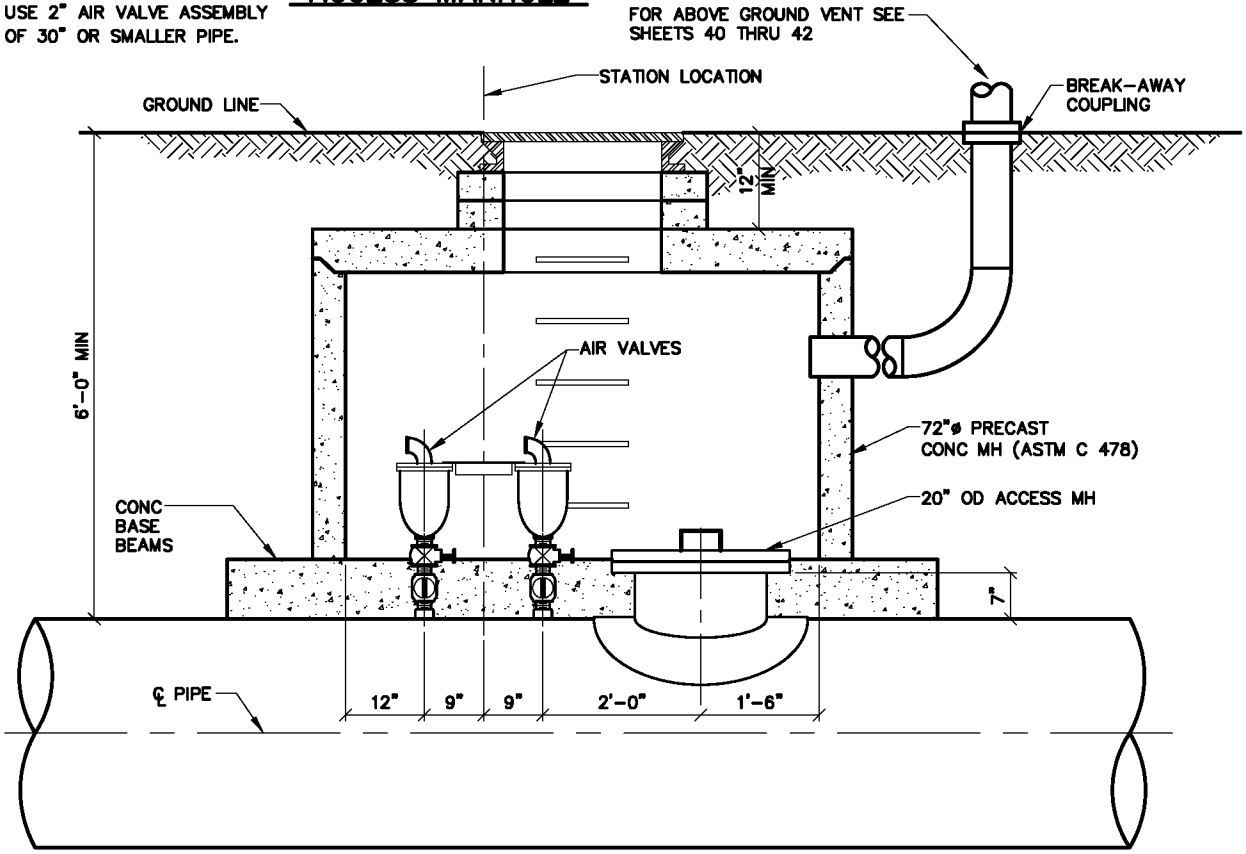

AIR VALVE ASSEMBLY WITH ACCESS MANHOLE

NOTES:

1. SEE SHEET 16 FOR CONC MH BASE BEAMS AND AIR VALVE DETAILS.
2. LADDER RUNGS ARE REQUIRED IN PRECAST MH. THE DISTANCE BETWEEN RUNGS, CLEATS, AND STEPS SHALL NOT EXCEED 12" INCHES AND SHALL BE UNIFORM THROUGHOUT THE LENGTH OF THE LADDER.
3. FOR MH INFORMATION SEE SHEET 82.

DENVER WATER
1600 West 12th Avenue • Denver, Colorado 80204
Phone(303)628-6000 • Telecopier No.(303)628-6851

AIR VALVE ASSEMBLY WITH ACCESS MANHOLE

Scale: NONE	Date: JUNE 1995	
Drawn: C.B.B.	Tr:	Ck:
Approved:	Dr. 127	No. 35

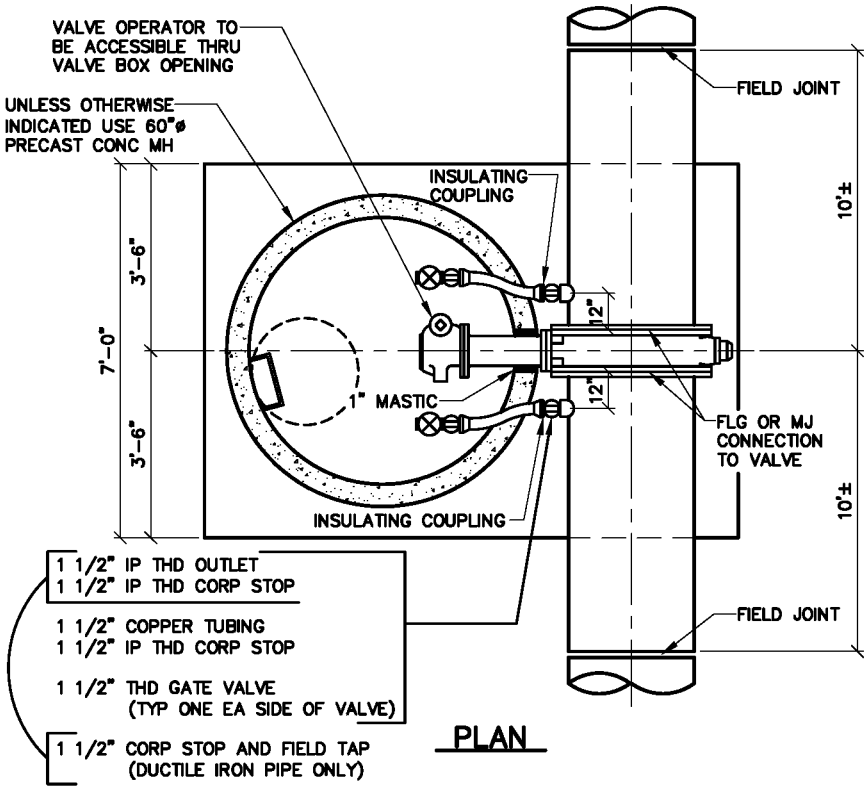

PLAN

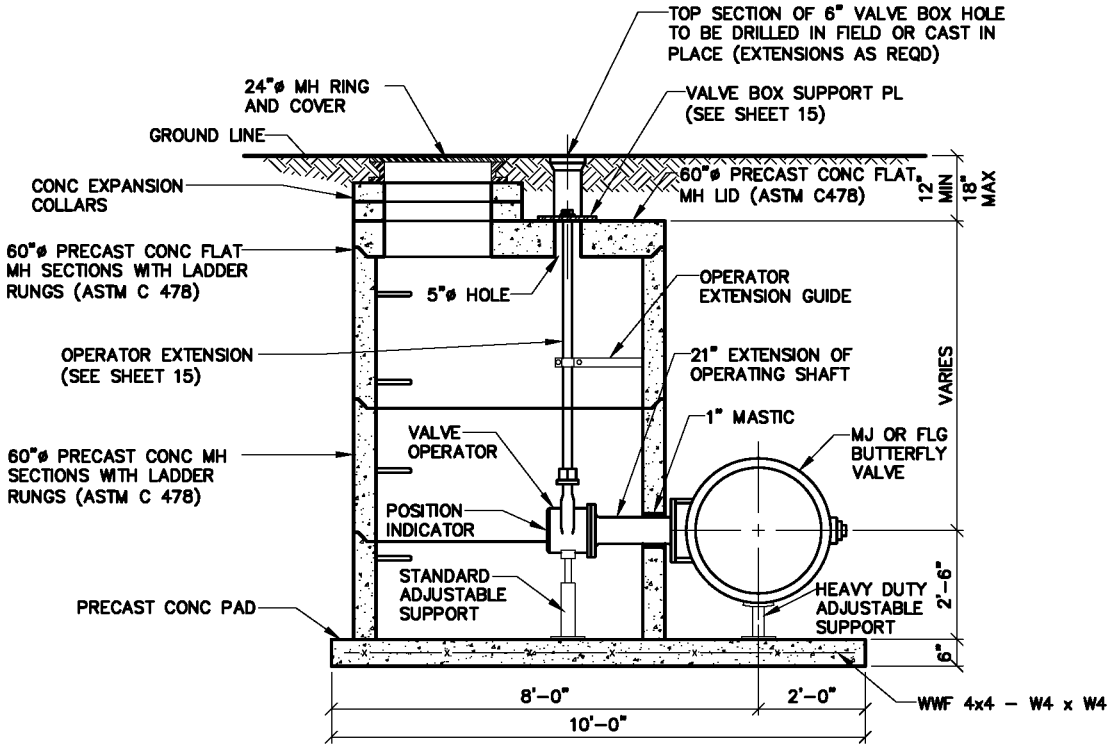

ELEVATION

NOTES:

1. 1 1/2" CORP STOP MAY BE DIRECT TAPPED TO 16" AND LARGER MAINS.
2. THE DISTANCE BETWEEN RUNGS, CLEATS AND STEPS SHALL NOT EXCEED 12 INCHES AND SHALL BE UNIFORM THROUGHOUT THE LENGTH OF THE LADDER.

DENVER WATER
1600 West 12th Avenue • Denver, Colorado 80204
Phone(303)628-6000 • Telecopier No.(303)628-6851

CONDUIT OR TRANSMISSION MAIN, MECHANICAL JOINT OF FLANGED BUTTERFLY VALVE INSTALLATION

Scale: NONE	Date: JUNE 1995	
Drawn: C.B.B.	Tr:	Ck:
Approved:	Dr. 127	No. 35

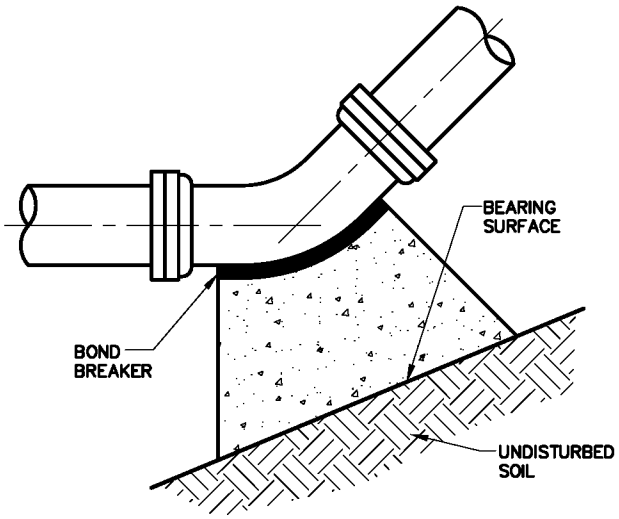

11 1/4°, 22 1/2°, 45° AND 90° BENDS

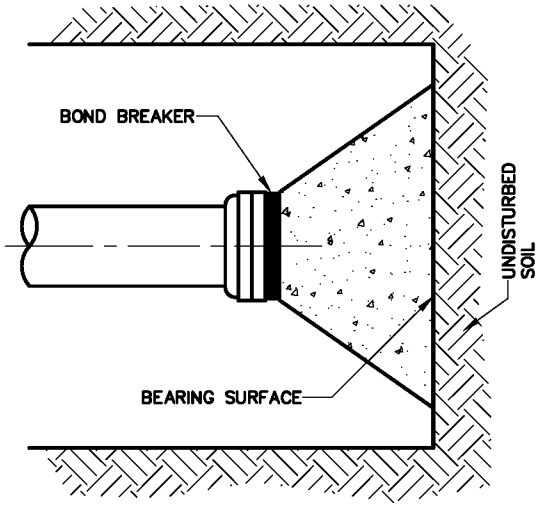

DEAD END

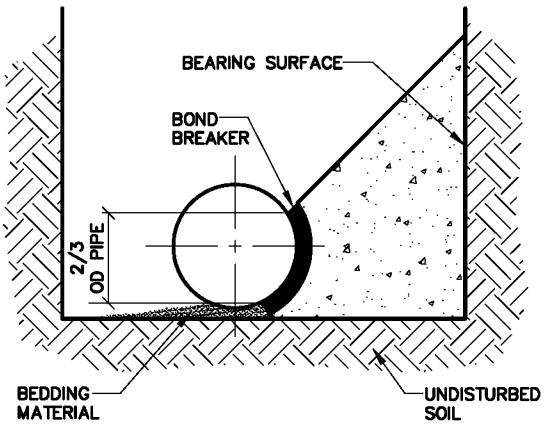

TYPICAL CROSS SECTION

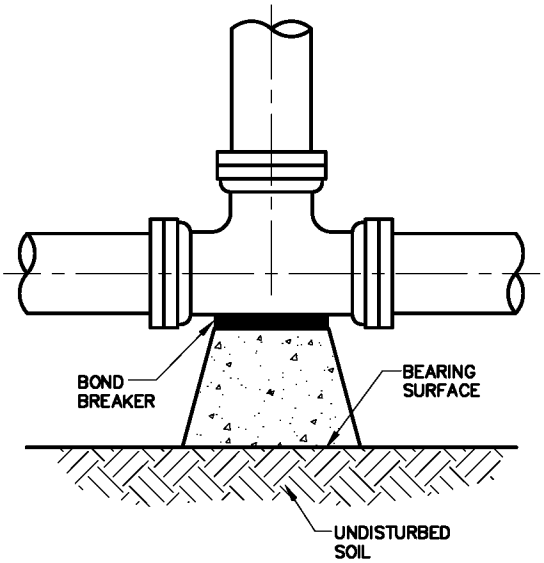

TEE

MINIMUM BEARING SURFACE AREA

(IN SQUARE FEET)

SIZE OF PIPE	BENDS				TEE OR DEAD END
	11 1/4°	22 1/2°	45°	90°	
4"	1.00	1.00	1.00	N/A	1.50
6"	1.00	1.25	2.25	N/A	3.00
8"	1.00	2.00	4.00	N/A	5.25
12"	2.25	4.50	8.75	N/A	11.25
16"	3.75	7.50	14.50	27.00	19.00
20"	5.00	10.00	19.50	35.50	25.00
24"	7.00	14.00	27.75	51.00	36.00

NOTES:

1. BEARING SURFACES SHOWN IN CHART ARE MIN.
2. BASED ON 150 PSI INTERNAL PIPE PRESSURE PLUS WATER HAMMER.
   4", 6", 8" AND 12" WATER HAMMER = 110 PSI
   16", 20" AND 24" WATER HAMMER = 70 PSI
3. SEE SECTION 6.42 AND SECTIONS 8.19 OF THE ENGINEERING STANDARDS.
4. BASED ON 3,000 PSF SOIL BEARING CAPACITY.

DENVER WATER
1600 West 12th Avenue • Denver, Colorado 80204
Phone(303)628-6000 • Telecopier No.(303)628-6851

CONCRETE KICKBLOCKS BEARING SURFACES & INSTALLATION

Scale: NONE	Date: JUNE 1995	
Drawn: C.B.B.	Tr:	Ck:
Approved:	Dr. 127	No. 35

CONCRETE KICKBLOCKS

WATER MAIN AND TAP SIZE COMBINATIONS WHICH REQUIRE A CONC KICKBLOCK BEHIND THE MAIN AT THE TAPPING SLEEVE OR SADDLE

ALL WATER MAINS

☒ INDICATED CONC KICKBLOCK REQD

MAIN SIZE (INCHES)

TAP SIZE (INCHES)	4	6	8	10	12	14	16	18	20	22	24	26	28	30	36	42
4	X	X	X	X	X	X										
6		X	X	X	X	X	X	X								
8			X	X	X	X	X	X	X	X	X					
10				X	X	X	X	X	X	X	X	X	X	X		
12					X	X	X	X	X	X	X	X	X	X	X	
14						X	X	X	X	X	X	X	X	X	X	X
16							X	X	X	X	X	X	X	X	X	X
18								X	X	X	X	X	X	X	X	X
20									X	X	X	X	X	X	X	X
22										X	X	X	X	X	X	X
24											X	X	X	X	X	X

ANY KICKBLOCK REQUIREMENTS FOR WATER MAIN AND TAP SIZE COMBINATIONS OTHER THAN THOSE SHOWN ABOVE WILL REQUIRE SPECIAL DESIGN APPROVAL BY THE ENGINEERING DIVISION.

DENVER WATER
1600 West 12th Avenue • Denver, Colorado 80204
Phone(303)628-6000 • Telecopier No.(303)628-8851

CONCRETE KICKBLOCK

Scale: NONE		Date: AUGUST 1995	
Drawn: C.B.B.	Tr:	Ck:	
Approved:		Dr. 127	No. 35

REVISED 2004

ROD DIAMETER, GRADE & LENGTH OF RESTRAINED PIPE

PIPE SIZE	4"			6"			8"			12"			16"			20"			24"		
FITTING	D	L	G	D	L	G	D	L	G	D	L	G	D	L	G	D	L	G	D	L	G
90° BEND, TEE, PLUG	3/4"	30'	MS	3/4"	45'	MS	3/4"	60'	MS	3/4"	86'	MS	1"	108'	HS	1 1/4"	132'	HS	–	155'	–
VALVE	–	–	–	–	–	–	–	–	–	–	–	–	1"	108'	HS	1 1/4"	132'	HS	–	155'	–
45° BEND	3/4"	9'	MS	3/4"	13'	MS	3/4"	18'	MS	3/4"	25'	MS	1"	32'	MS	3/4"	39'	HS	–	45'	–
22 1/2° BEND	3/4"	1'	MS	3/4"	4'	MS	3/4"	5'	MS	3/4"	7'	MS	3/4"	8'	MS	3/4"	10'	MS	–	12'	–
11 1/4° BEND	–	–	–	–	–	–	3/4"	1'	MS	3/4"	2'	MS	3/4"	2'	MS	3/4"	3'	MS	–	3'	–

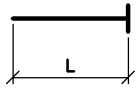

PLUG

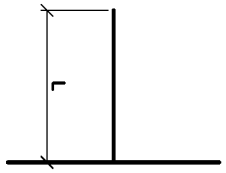

TEE

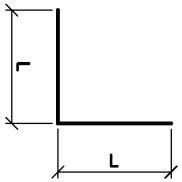

90° BEND

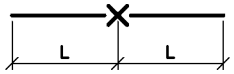

VALVE

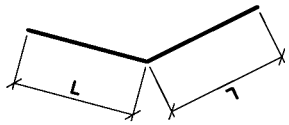

BENDS

NOTES:

1. LENGTH OF RESTRAINED PIPE MEASURED EACH WAY FROM VALVES AND BENDS.
2. CLAMPS, RODS & MEGALUGS NOT ALLOWED FOR 24" & LARGER PIPES.
3. D=DIAMETER, L=LENGTH, G=GRADE, MS=MILD STEEL, HS=HIGH STRENGTH.
4. MIN 4.5' GROUND COVER REQD.
5. BASED ON 150 PSI INTERNAL PRESSURE, FOR L AND PRESSURES LISTED ON SHEET 22 FOR D AND G.
6. MS = MILD STEEL ROD ASTM A 36.
7. HS = HIGH STRENGTH ROD ASTM A 193 GRADE B7.
8. NUTS SHALL BE ASTM A 307 GRADE A OR B HEXAGON HEAVY SERIES. HS NUTS SHALL CONFORM TO MS–22.
9. SEE TIE ROD DETAIL DRAWING. ALSO, TIE ROD COUPLING DETAILS, CLAMP DETAILS AND SET CLAMP DETAILS.
10. LENGTH REFERS TO THE AMOUNT OF PIPE WHICH MUST BE RESTRAINED TOGETHER AND IS NOT NECESSARILY THE LENGTH OF THE RODS.
11. LENGTH OF RESTRAINED PIPE CHART IS ALSO FOR THE LENGTH OF JOINT RESTRAINT FOR MEGALUGS.
12. CROSSES MUST BE RESTRAINED IN ALL APPLICABLE DIRECTIONS.
13. 12" AND SMALLER IN LINE VALVES AND TEES SHALL HAVE A MECHANICAL JOINT RESTRAINT DEVICE ON EACH SIDE OF THE FITTING OR VALVE. MECHANICAL JOINT RESTRAINT DEVICE SHALL BE PER MS–2.
14. A SECOND VALVE WILL BE REQD TO BE CLOSED WHEN EXCAVATING NEXT TO A EXIST VALVE.
15. ON PLUGS, TEES AND BENDS KICKBLOCK SHALL BE USED IN ADDITION TO RESTRAINT.
16. WHEN REDUCERS ARE USED ON VALVE INSTALLATIONS THE LENGTH OF RESTRAINT SHALL BE BASED ON THE SIZE OF THE PIPE NOT THE SIZE OF THE VALVE.

DENVER WATER
1600 West 12th Avenue • Denver, Colorado 80204
Phone(303)628–6000 • Telecopier No.(303)628–6851

LENGTH OF RESTRAINED PIPE

Scale: NONE | Date: MARCH 1997
Drawn: C.B.B. | Tr: | Ck:
Approved: | Dr. 127 | No. 35

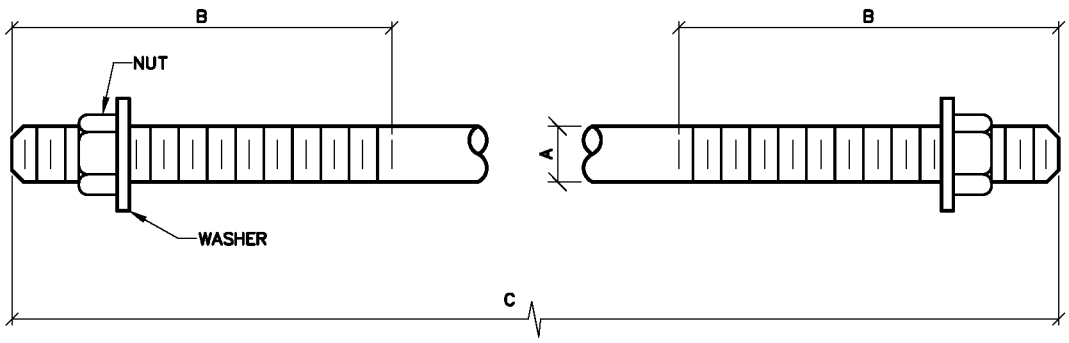

TIE ROD DETAILS

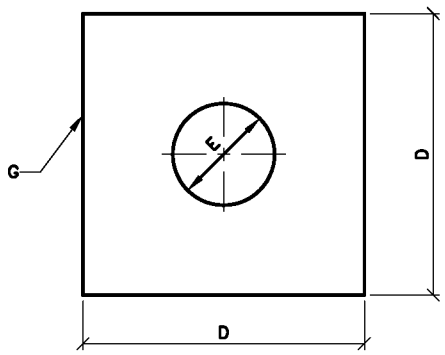

WASHER DETAIL

TIE RODS			
A	B	C	
ROD ø	THREAD LENGTH	ROD LENGTH	GRADE
3/4", 1"	6"	1' TO 11' & 20'	MS
3/4", 1 1/2"	ALL THREAD	1' TO 11' & 20'	HS

WASHERS		
D	F	G
WIDTH	HOLE ø	THICKNESS
5"	1/8" LARGER THAN ROD ø	1/2"
6"	1/8" LARGER THAN ROD ø	5/8"

NOTES:

1. SEE TIED JOINTS, ROD DIMENSIONS SHEET.
2. SEE CLAMP DETAILS AND DIMENSION (SHEET 24) FOR PROPER PLACEMENT OF WASHERS.
3. MS=MILD STEEL HS=HIGH STRENGTH

DENVER WATER
1600 West 12th Avenue • Denver, Colorado 80204
Phone(303)628-6000 • Telecopier No.(303)628-6851

TIE ROD AND WASHER DETAILS

Scale: NONE | Date: JULY 1995

Drawn: C.B.B. | Tr: | Ck:

Approved: | Dr. 127 No. 35

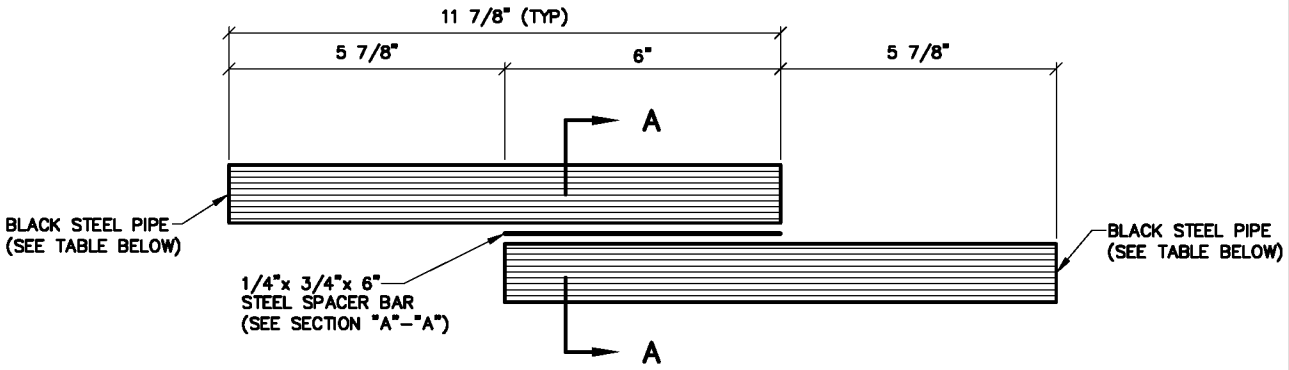

TIE ROD COUPLING DETAIL

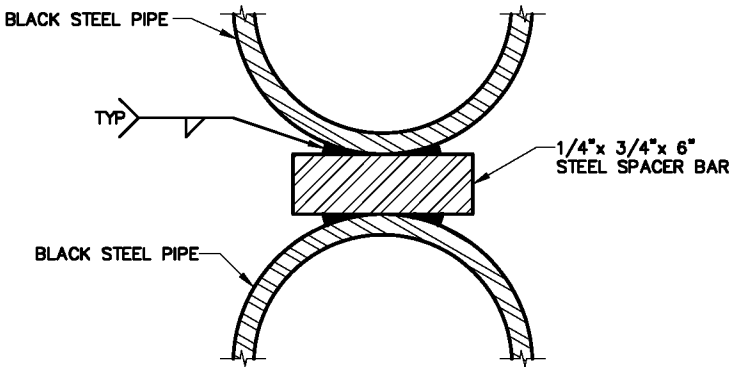

SECTION A – A

ROD SIZE	PIPE ø
3/4"	1"
1"	1 1/4"
1 1/4"	ALL THREAD

NOTE:
BLACK STEEL PIPE = SCHEDULE 40

DENVER WATER
1600 West 12th Avenue • Denver, Colorado 80204
Phone(303)628–6000 • Telecopier No.(303)628–6851

TIE ROD COUPLING

Scale: NONE	Date: JUNE 1995	
Drawn: C.B.B.	Tr:	Ck:
Approved:	Dr. 127	No. 35

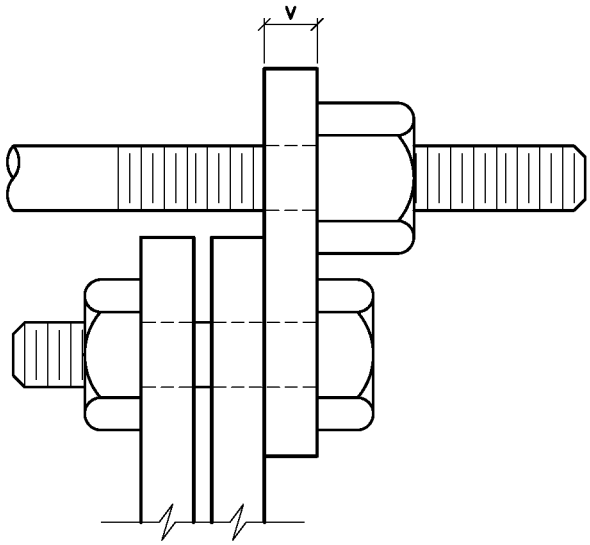

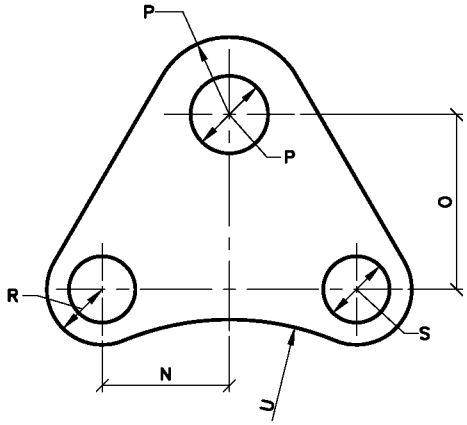

FLANGE LUG DETAIL

DIMENSIONS

(IN INCHES)

PIPE ø	N	O	HS RODS		MS RODS		R	S	U	V	PIPE ø
			P	ROD ø	P	ROD ø					
3	2 1/8	2 9/16"	7/8	3/4	7/8	3/4	3/4	5/8	2 3/8	3/4	3
4	1 7/16	2	7/8	3/4	7/8	3/4	3/4	5/8	3 1/8	3/4	4
6	1 13/16	2 1/16	7/8	3/4	7/8	3/4	7/8	3/4	4	3/4	6
8	2 1/4	2 1/4	7/8	3/4	7/8	3/4	7/8	3/4	5 1/8	3/4	8
10	1 7/8	2 1/16	7/8	3/4	7/8	3/4	1	7/8	6 1/4	3/4	16"
12	2 1/4	2 5/16	7/8	3/4	–	–	1	7/8	5 7/8	1	10
16	2 1/8	2 7/16	1 1/8	1	–	–	1 1/8	1	9 5/8	1 1/8	12
20	2	2 5/8	1 3/8	1 1/4	–	–	1 1/4	1 1/8	11 3/8	1 1/4	20
24	RODS AND CLAMPS NOT ALLOWED										24

NOTES:

1. MS MEANS MILD STEEL ROD ASTM A 36 (NUTS SHALL BE ASTM A 307 GRADE A OR B HEXAGON HEAVY SERIES)
2. HS MEANS HIGH STRENGTH STEEL ROD ASTM A 193 GRADE B7. (NUTS SHALL BE ASTM A 194 GRADE 2H)

DENVER WATER
1600 West 12th Avenue • Denver, Colorado 80204
Phone(303)628–6000 • Telecopier No.(303)628–6851

FLANGE LUG DETAIL

Scale: NONE	Date: JUNE 1995	
Drawn: C.B.B.	Tr:	Ck:
Approved:	Dr. 127	No. 35

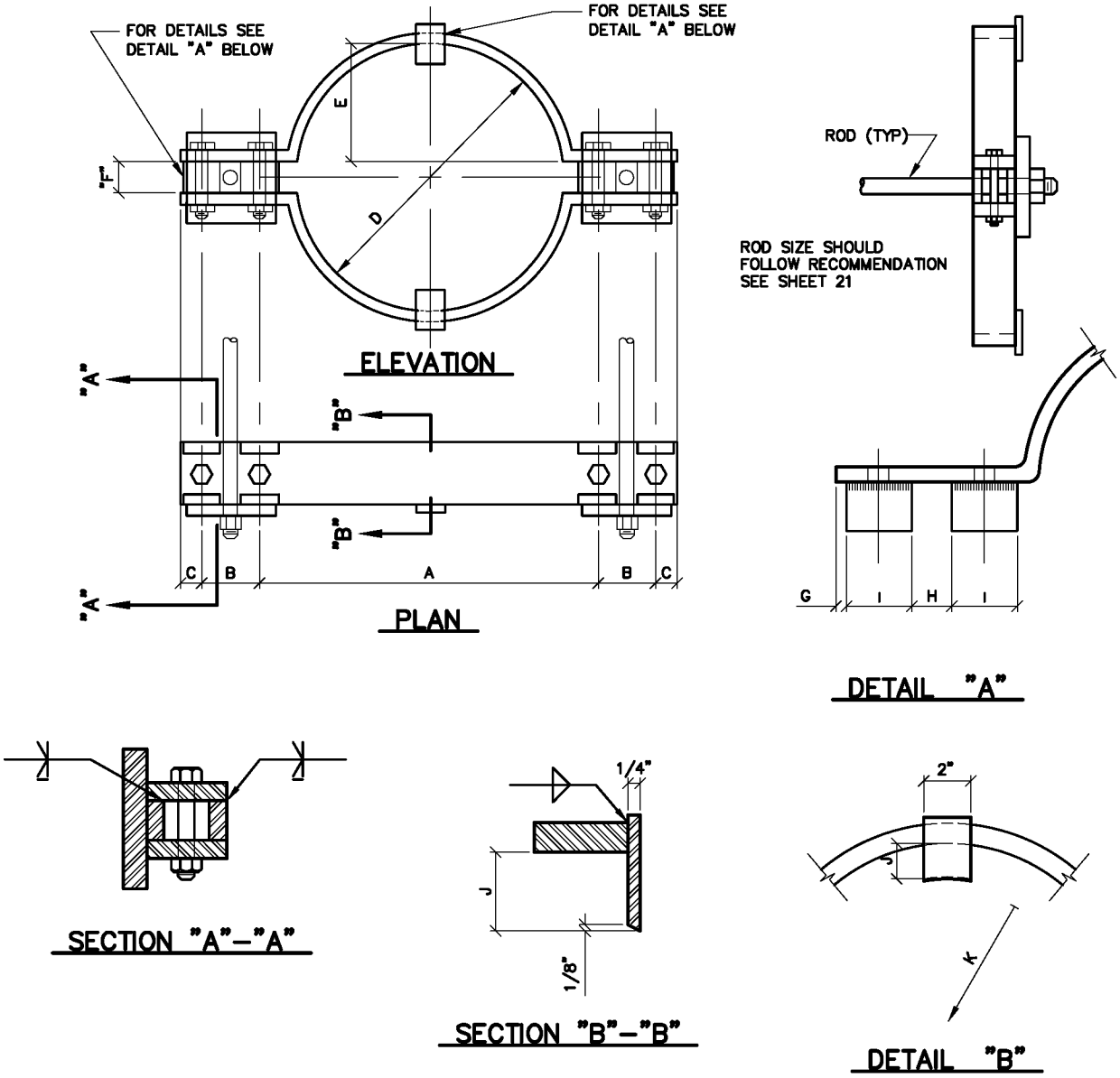

TABLE OF DIMENSIONS FOR CLAMPS

PIPE ø	BAR SIZE	A		B		C		D		E		F		G		H		I		J	K	BOLT SIZE		PIPE ø
		BELL CLAMP	BODY CLAMP	BELL CLAMP	BODY CLAMP	BELL CLAMP	BODY CLAMP	BELL CLAMP	BODY CLAMP	BELL CLAMP	BODY CLAMP	BELL CLAMP	BODY CLAMP	BELL CLAMP	BELL CLAMP	BELL CLAMP	BODY CLAMP	BELL CLAMP	BODY CLAMP	BELL CLAMP	BODY CLAMP	BELL CLAMP	BODY CLAMP	
4	1 1/2x 1/2	9	7 3/8	3	4	1 1/2	1 1/2	6 1/4	4 3/4	2 5/8	1 7/8			3/8	3/8	1 1/4	1 1/4	2 1/4	2 1/2	5/8	2 1/2	3x 1 1/2	2 1/2x 3/8	4
6	2 x 1/2	11 1/4	9 5/8	3	4	1 1/2	1 1/2	8 1/2	6 7/8	3 3/4	2 15/16							2 1/4	2 1/2	1/2	3 3/4	3 1/2x 1/2	3 1/2x 1/2	6
8	2 1/2x 1/2	13 5/8	11 7/8	3 1/2	4	1 1/2	1 1/2	10 3/4	9 1/8	4 7/8	4 1/16							2 1/4	2 1/2	5/8	4 3/4	4 1/2x 1/2	4x 1/2	8
12	2 1/2x 5/8	18 1/4	16 3/8	3 1/2	4	1 1/2	1 1/2	15 1/8	13 1/4	7 1/16	6 1/8							2 1/4	2 1/2	13/16	6 3/4	4 1/2x 5/8	4 1/2x 5/8	12
16	3x 3/4	23 1/8	20 5/8	4	4 1/2	1 1/2	1 1/2	19 3/4	17 3/8	9 1/4	8 1/16	1 1/4	1 1/4	1/4	1/4	1 1/2	1 1/2	2 1/4	2 3/4	15/16	8 15/16	5 1/2x 5/8	5 1/2x 5/8	16
20	3x 3/4	27 1/2	25	4	4 1/2	1 1/2	1 1/2	24 1/8	21 5/8	11 5/16	10 1/16	1 1/2	1 1/2	3/8	3/8	1 3/4	1 3/4	2 1/4	2 1/2	1	11 1/16	5 1/2x 5/8	5 1/2x 5/8	20
24	RODS AND CLAMPS NOT ALLOWED.																							24

NOTE:
ALL DIMENSIONS IN INCHES

NOTE:
NOT FOR USE WITH 18" & 20" DI COMPACT FITTINGS.

DENVER WATER
1600 West 12th Avenue • Denver, Colorado 80204
Phone(303)628–6000 • Telecopier No.(303)628–6851

CLAMP DETAILS & DIMENSIONS FOR USE WITH CI & DI FITTINGS ONLY

Scale: NONE | Date: JUNE 1995

Drawn: C.B.B. | Tr: | Ck:

Approved: | Dr. 127 No. 35

REVISED 4–2004

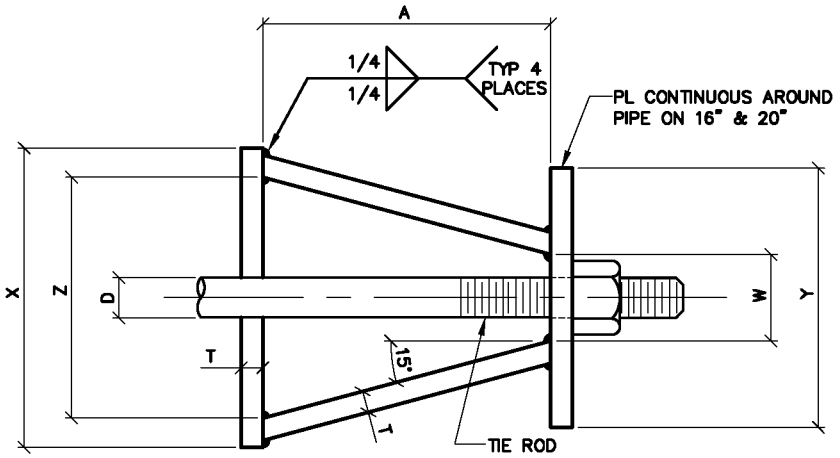

TOP VIEW

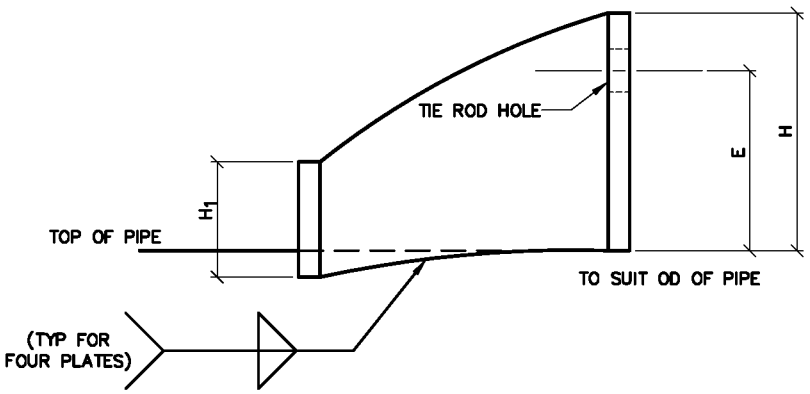

SIDE VIEW

	CARRIER PIPE NOMINAL ø	STUD ø D	A	W	Z	T	H	E	H_1	Y	X
W/O FLANGED LUGS	4" TO 12"	3/4"	5"	1 1/2"	3 3/4"	3/8"	4 1/8"	3 1/8"	2"	4 1/2"	5"
	16"	1"	5 3/4"	1 3/4"	4 1/2"	1/2"	4 1/2"	3 1/4"	2"	RING	6"
	20"	1 1/4"	7 1/2"	2"	5 3/4"	5/8"	5"	3 3/4"	2 1/2"	RING	7 1/2"

NOTES:

1. USE TWO HS STEEL TIE RODS AT END OF CASING.
2. TIE ROD HOLE ø 1/8" LARGER THAN STUD ø.
3. BOTTOM EDGE OF ALL PLATES SHAPED TO FIT OD OF PIPE.
4. HARNESS LUGS AS PER AWWA MANUAL M11.

DENVER WATER
1600 West 12th Avenue · Denver, Colorado 80204
Phone(303)628-6000 · Telecopier No.(303)628-6851

COMBINATION FLANGED HARNESS LUG DETAILS

Scale: NONE		Date: JUNE 1995	
Drawn: C.B.B.	Tr:	Ck:	
Approved:		Dr. 127	No. 35

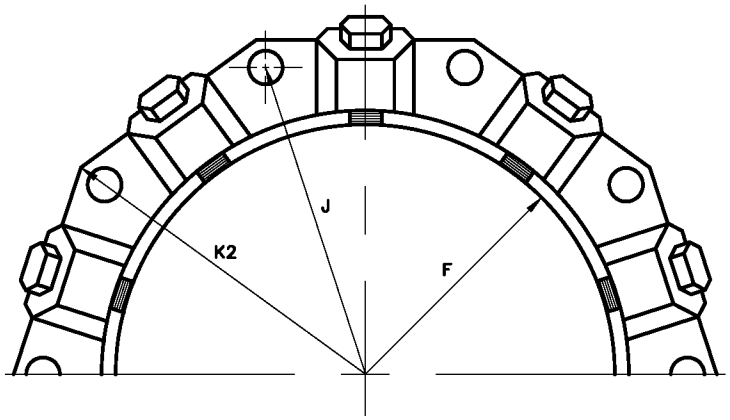

MECHANICAL JOINT RESTRAINT

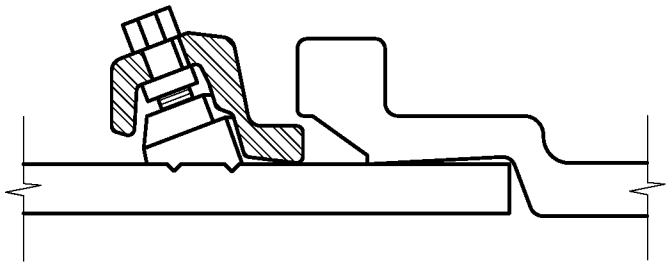

WEDGE DETAIL

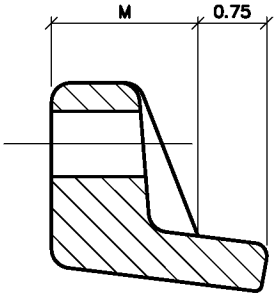

BOLT HOLE DETAIL

DIMENSIONS

	NOMINAL PIPE SIZE	NO OF BOLTS	NO OF WEDGES	K2 INCHES	J INCHES	F INCHES	M INCHES	
PVC	4"	2	2					PVC
	6"	6	3	11.12	9.50	7.00	0.88	
	8"	6	4	13.37	11.75	9.15	1.00	
	10"	8	6	15.62	14.00	11.20	1.00	
	12"	8	8	17.88	16.25	13.30	1.25	
DI	4"	4	2					DI
	6"	6	3	11.12	9.50	7.00	0.88	
	8"	6	4	13.37	11.75	9.15	1.00	
	10"	8	6	15.62	14.00	11.20	1.00	
	12"	8	8	17.88	16.25	13.30	1.25	
	16"	12	12	22.50	21.00	17.54	1.56	
	20"	14	14	27.00	25.50	21.74	1.69	

NOTES:

1. REFER TO MS-27 OR SECTION 6.05 PARAGRAPH D.
2. DIMENSIONS FOR 16" AND 20" DI PIPE NOT SHOWN.
3. OTHER MECHANICAL JOINT RESTRAINT DEVICES MUST BE APPROVED BEFORE INSTALLATION.

DENVER WATER
1600 West 12th Avenue • Denver, Colorado 80204
Phone(303)628-6000 • Telecopier No.(303)628-6851

MECHANICAL JOINT RESTRAINT DETAILS

Scale: NONE | Date: JUNE 1995

Drawn: C.B.B. | Tr: | Ck:

Approved: | Dr. 127 No. 35

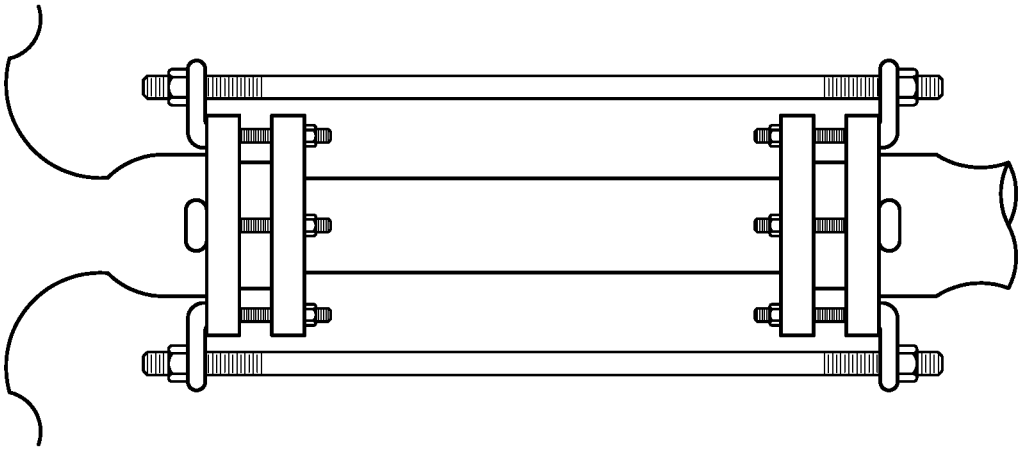

PLAN

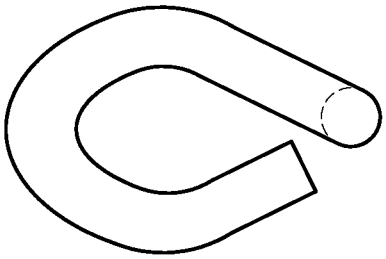

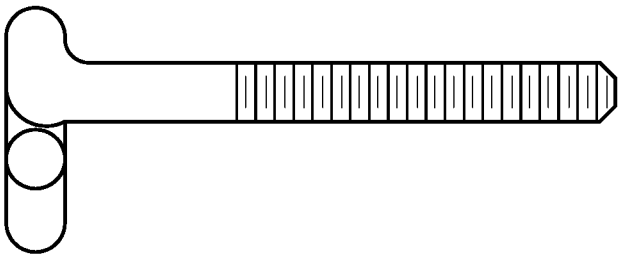

DETAIL

DIMENSIONS

ALLOWABLE PIPE ø INCHES	BOLT SIZE INCHES	NO OF BOLTS REQD
4	3/4	2
6	3/4	2
8	3/4	2
10	3/4	4
12	3/4	6

NOTES:

1. THE BOLT SHALL BE MANUFACTURED OF "COR-TEN" OR APPROVED EQUAL.
2. THE BOLT MAY BE HEAT TREATED.

DENVER WATER
1600 West 12th Avenue • Denver, Colorado 80204
Phone(303)628-6000 • Telecopier No.(303)628-6851

JOINT RESTRAINT DETAIL

Scale: NONE	Date: JUNE 1995	
Drawn: C.B.B.	Tr:	Ck:
Approved:	Dr. 127	No. 35

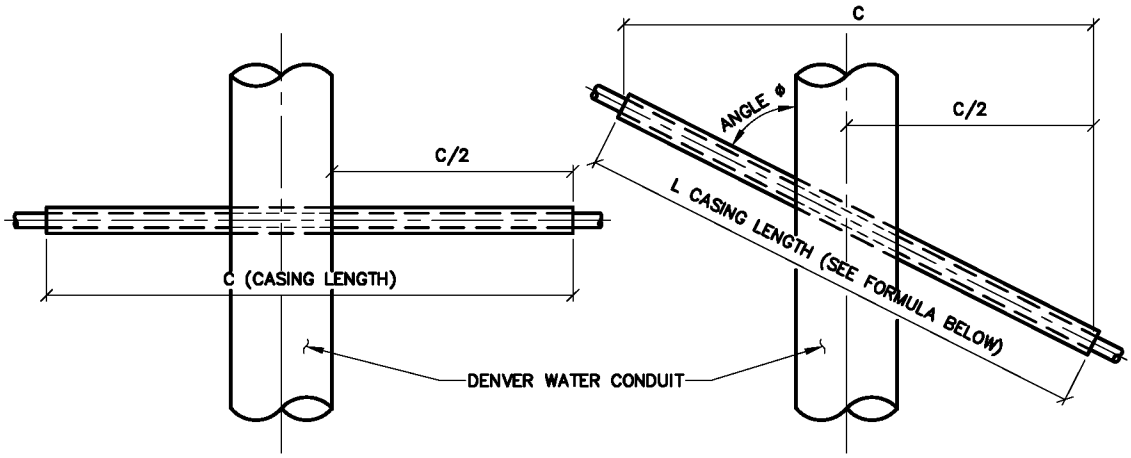

PLAN
FOR PERPENDICULAR CROSSING

PLAN
FOR ANGLE CROSSING

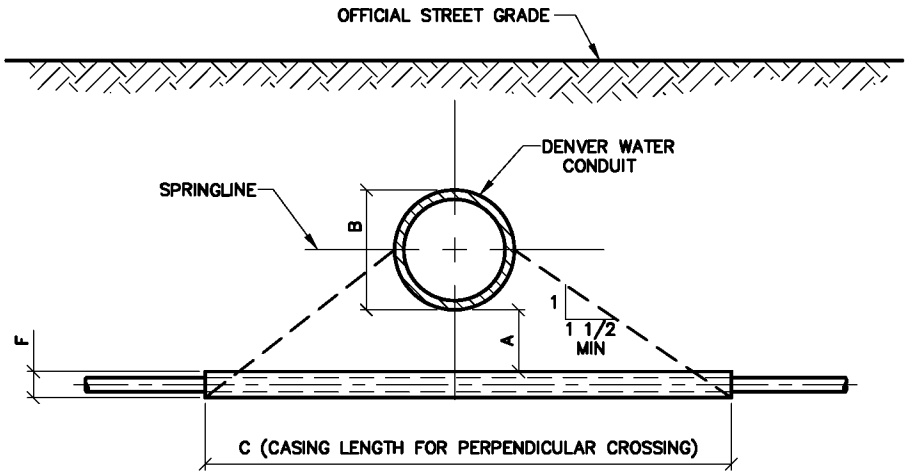

PROFILE

FORMULA FOR FINDING C:

$$C = B+(2)(1.5)\left[\frac{B}{2}+A+F\right]$$

- C — PERPENDICULAR CROSSING CASING LENGTH
- B — OD DENVER WATER CONDUIT
- (2)(1.5) — CONSTANT
- 1.5 — RATIO OF MIN SLOPE
- B/2 — 1/2 OD DENVER WATER CONDUIT
- A — VERTICAL DISTANCE BETWEEN CASING AND DENVER WATER CONDUIT.
- F — CASING OD

FORMULA FOR FINDING L:

$$L=\frac{C}{\sin \phi}$$

NOTES:

1. FINAL APPROVAL OF BORING AND CASING METHOD AND MATERIALS SHALL BE OBTAINED FROM THE ENGINEER PRIOR TO CONSTRUCTION.
2. SOIL AT ENDS OF CASING SHALL BE STABLE AT ALL TIMES.
3. CATHODIC PROTECTION SHALL BE PROVIDED FOR STEEL CASING AS REQUIRED BY THE ENGINEER.
4. CASING PIPE SHALL BE ONE PIECE, STRAIGHT, ROUND AND OF NEW MATERIAL.

DENVER WATER
1600 West 12th Avenue • Denver, Colorado 80204
Phone(303)628-6000 • Telecopier No.(303)628-6851

BORED CROSSING BENEATH CONDUITS

Scale: NONE	Date: JULY 1995	
Drawn: C.B.B.	Tr:	Ck:
Approved:	Dr. 127	No. 35

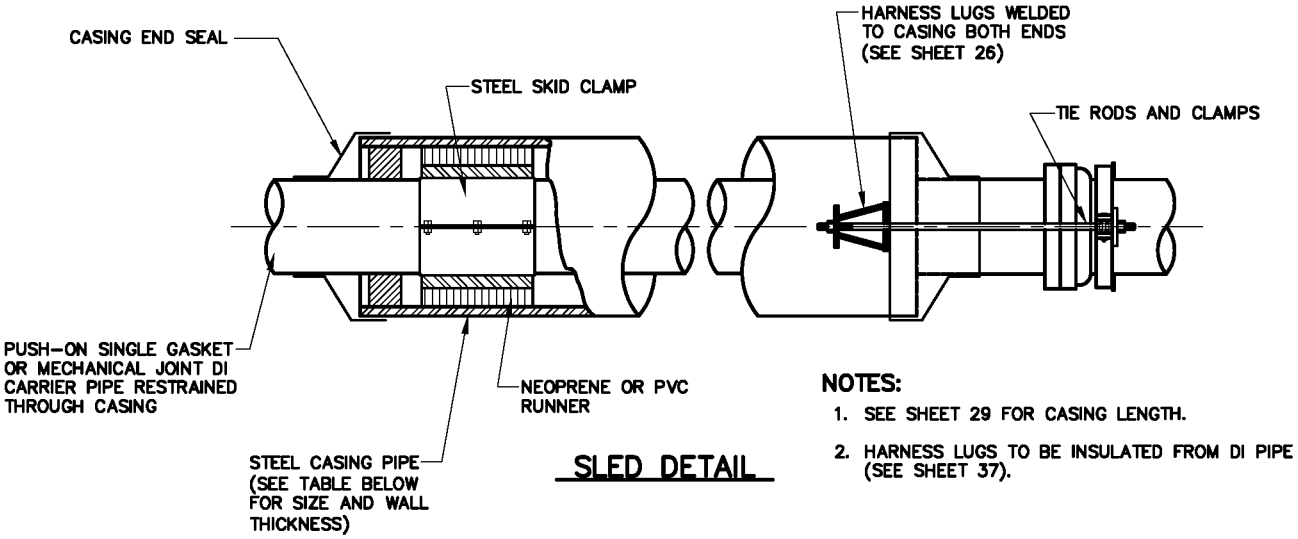

SLED DETAIL

NOTES:

1. SEE SHEET 29 FOR CASING LENGTH.
2. HARNESS LUGS TO BE INSULATED FROM DI PIPE (SEE SHEET 37).

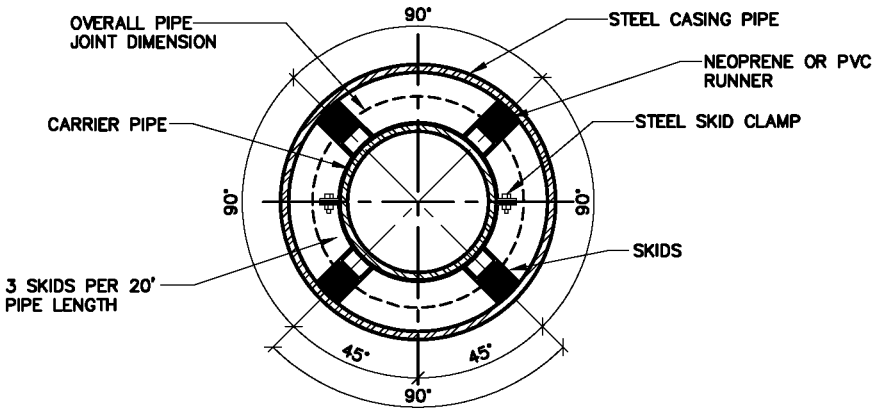

PIPE CASING DETAIL

CARRIER PIPE NOMINAL ø	CASING PIPE	
	MIN OD	MIN WALL THICKNESS
4"	12"	0.188"
6"	16"	0.25"
8"	18"	0.282"
12"	22"	0.344"
16"	28"	0.406"
20"	32"	0.469"

NOTE:

TRENCH LAID CASINGS SHALL BE DESIGNED AND INSTALLED TO CONDUIT STANDARDS.

DENVER WATER
1600 West 12th Avenue • Denver, Colorado 80204
Phone(303)628-6000 • Telecopier No.(303)628-6851

BORE CASING DETAIL

Scale: NONE	Date: JULY 1995	
Drawn: C.B.B.	Tr:	Ck:
Approved:	Dr. 127	No. 35

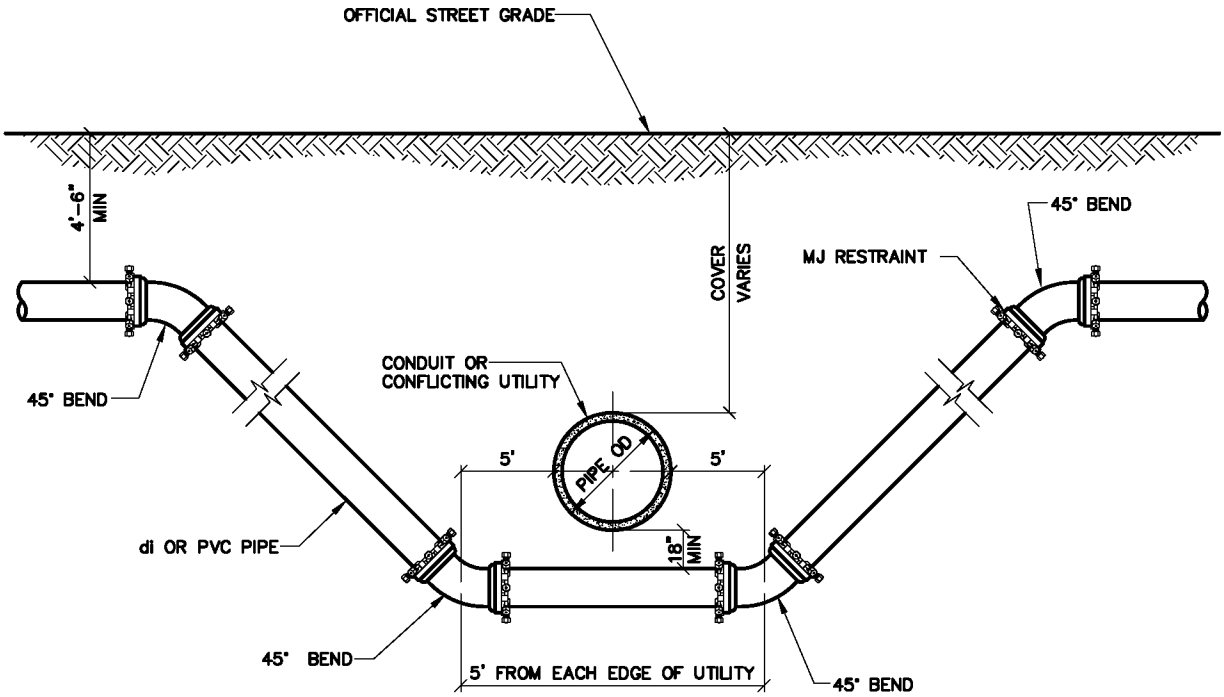

NOTES:

1. LENGTH OF EXTENSION OF PIPE AND RESTRAINED JOINTS SHALL BE IN ACCORDANCE WITH THESE ENGINEERING STANDARDS.
2. CATHODIC PROTECTION SHALL BE AS REQUIRED IN ACCORDANCE WITH THESE ENGINEERING STANDARDS.
3. A BORED CROSSING MAY BE REQD BY THE ENGINEER.

DENVER WATER
1600 West 12th Avenue • Denver, Colorado 80204
Phone(303)628-6000 • Telecopier No.(303)628-6851

OPEN CUT CROSSING BENEATH CONDUIT OR CONFLICTING UTILITY

Scale: NONE	Date: JULY 1995	
Drawn: C.B.B.	Tr:	Ck:
Approved:	Dr. 127	No. 35

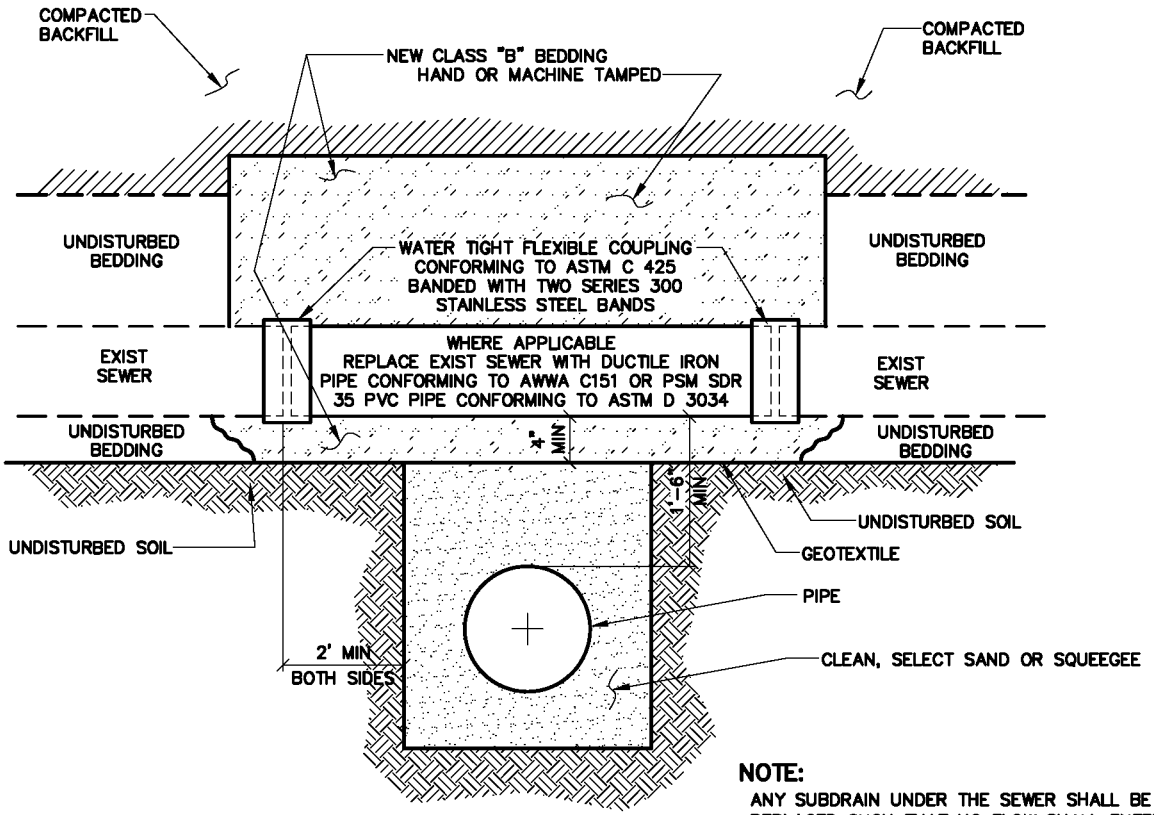

NOTE:
ANY SUBDRAIN UNDER THE SEWER SHALL BE REPLACED SUCH THAT NO FLOW SHALL ENTER THE WATER LINE TRENCH.

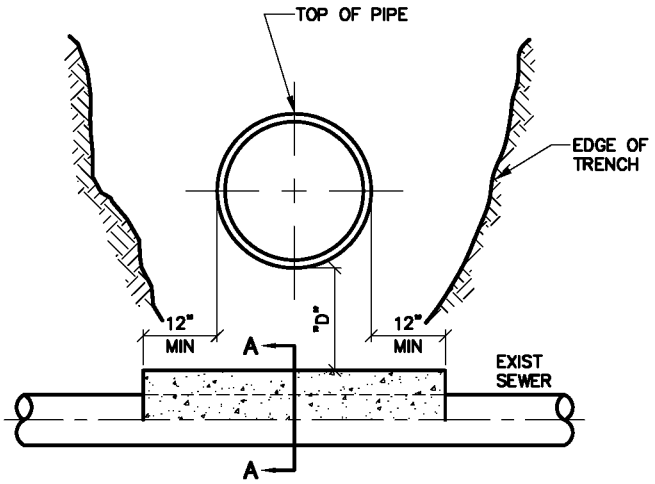

SEWER CROSSING UNDER
WITH "D" LESS THAN 2'

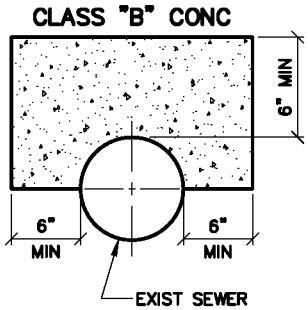

SECTION A–A

NOTE:
ALL EXIST SEWER DAMAGED DURING INSTALLATION MUST BE REPLACED WITH PVC PIPE.

DENVER WATER
1600 West 12th Avenue • Denver, Colorado 80204
Phone(303)628–6000 • Telecopier No.(303)628–6851

CROSSING STORM AND SANITARY SEWERS

Scale: NONE	Date: JULY 1995
Drawn: C.B.B.	Tr:	Ck:
Approved:	Dr. 127 No. 35

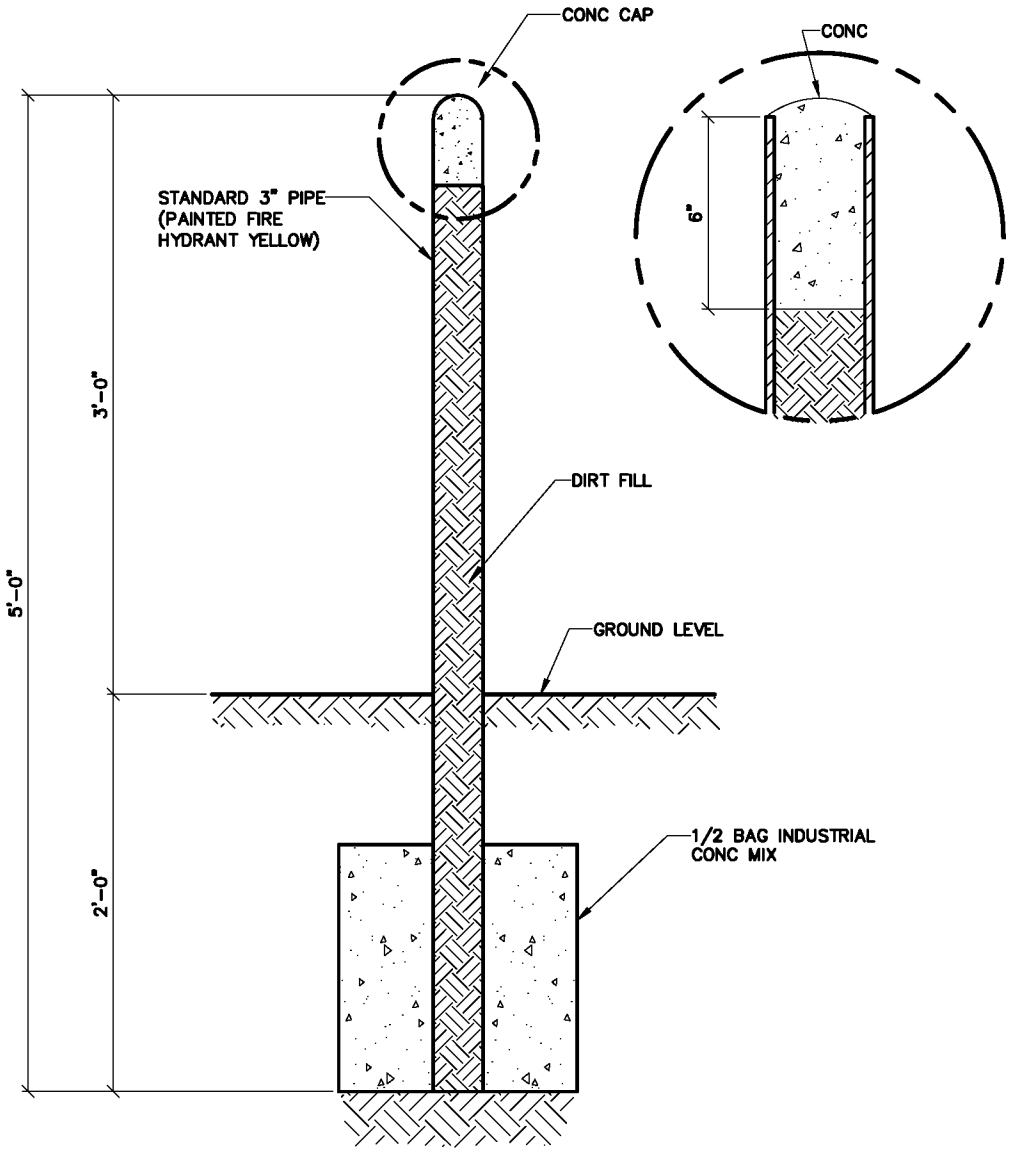

IDENTIFICATION MARKS ON POSTS SHALL BE 3"ø CIRCLES BROKEN IN VERTICAL CENTER () POINTING TO APPURTENANCE, WITH 1" STENCILS INSIDE CIRCLE INDICATING TYPE OF APPURTENANCE (MH, 12" GATE VALVE, ETC) AND THE DISTANCE IN FEET AND INCHES FROM POST.

DENVER WATER
1600 West 12th Avenue·Denver, Colorado 80204
Phone(303)628-6000·Telecopier No.(303)628-6851

REFERENCE POST TYPICAL DETAIL

Scale: NONE	Date: JULY 1995	
Drawn: C.B.B.	Tr:	Ck:
Approved:	Dr. 127	No. 35

REVISED 2004

SHEET 33

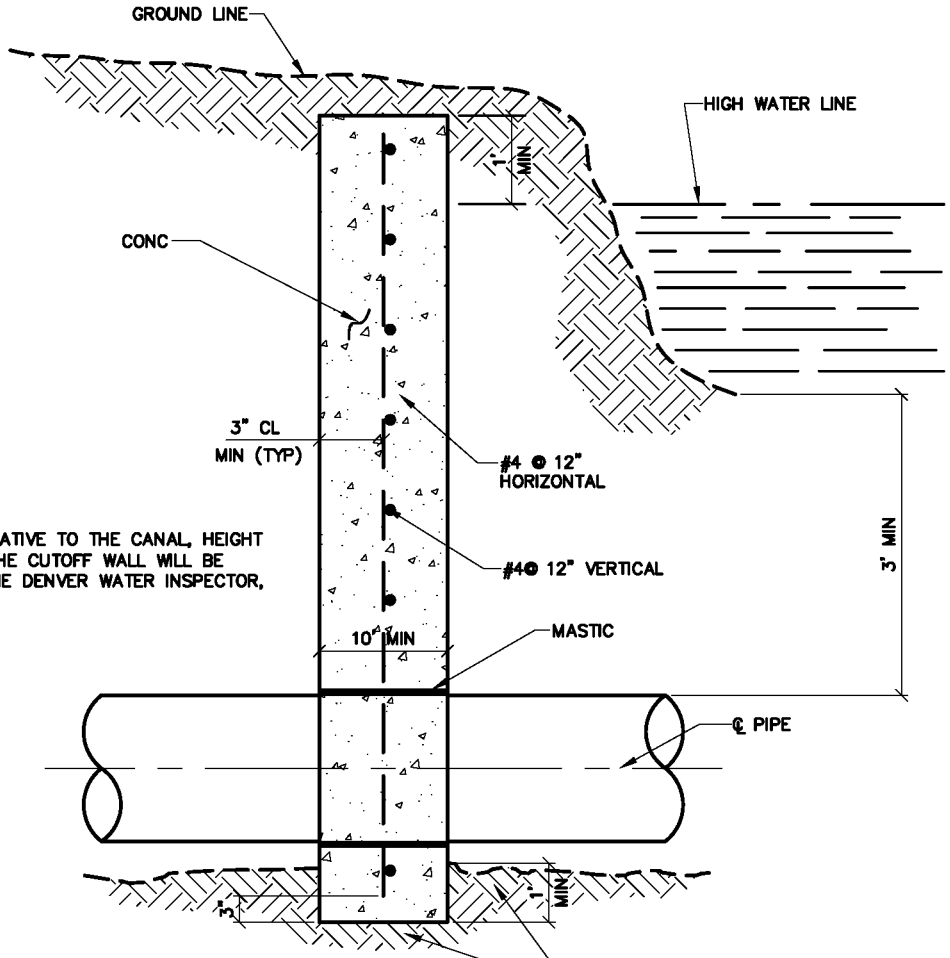

SIDE VIEW

NOTE:
THE LOCATION RELATIVE TO THE CANAL, HEIGHT AND LENGTH OF THE CUTOFF WALL WILL BE DETERMINED BY THE DENVER WATER INSPECTOR, OR OWNER.

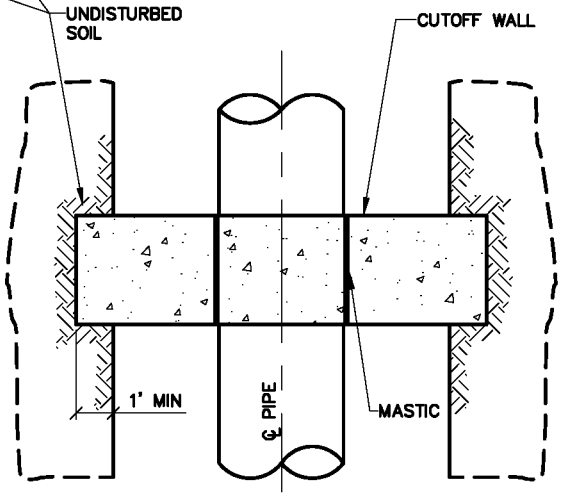

TOP VIEW

NOTE:
REINFORCEMENT NOT SHOWN.

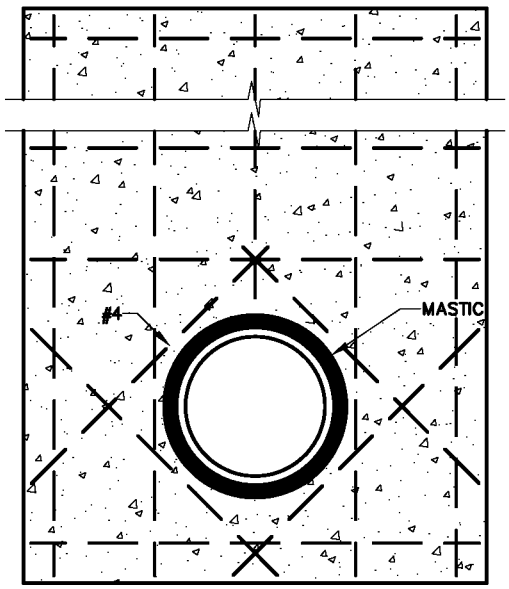

FRONT VIEW

DENVER WATER
1600 West 12th Avenue • Denver, Colorado 80204
Phone(303)628-6000 • Telecopier No.(303)628-6851

TYPICAL CUTOFF WALL FOR DITCH OR CANAL CROSSING

Scale: NONE	Date: JULY 1995	
Drawn: C.B.B.	Tr:	Ck:
Approved:	Dr. 127	No. 35

REVISED 2004

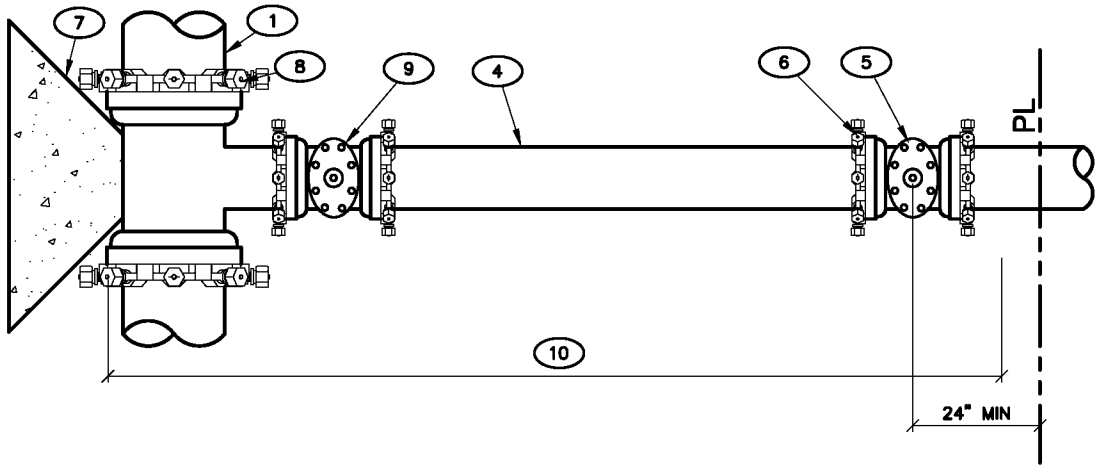

FIRELINE OR DOMESTIC CONNECTION WITH MAIN EXTENSION

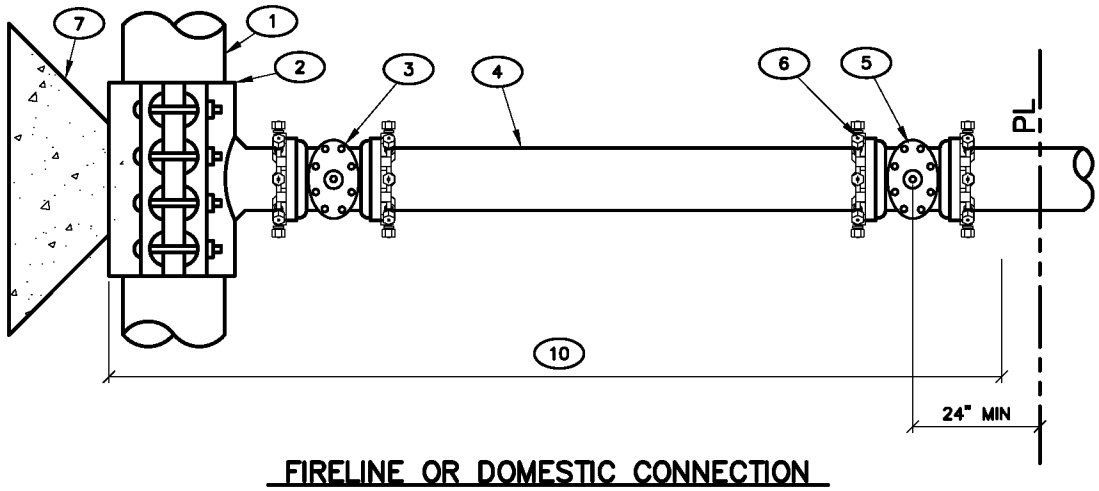

FIRELINE OR DOMESTIC CONNECTION

1. EXIST MAIN
2. TAPPING SLEEVE
3. TAPPING VALVE
4. DOUBLE SPIGOT PIPE FULLY RESTRAINED
5. MJ LINE VALVE 2' FROM PL
6. MECHANICAL RESTRAINT
7. CONC KICKBLOCK
8. MJ ANCHORING TEE (SWIVEL TEE WHERE APPLICABLE)
9. MJ VALVE
10. POLYETHYLENE WRAPPED

DENVER WATER
1600 West 12th Avenue • Denver, Colorado 80204
Phone(303)628-6000 • Telecopier No.(303)628-6851

2" AND LARGER DOMESTIC AND FIRELINE CONNECTIONS

Scale: NONE		Date: JULY 1995	
Drawn: C.B.B.	Tr:	Ck:	
Approved:		Dr. 127	No. 35

NOTE:
ALL DOMESTIC TAPS 2" AND SMALLER REQUIRE A BRASS SERVICE SADDLE EXCEPT ON 4" FIRELINE CONNECTIONS WITH A 1 1/2" UP TO 2" DOMESTIC SERVICE THEN A 4" MJ x 1 1/2" UP TO 2" THD TEE WILL BE USED.

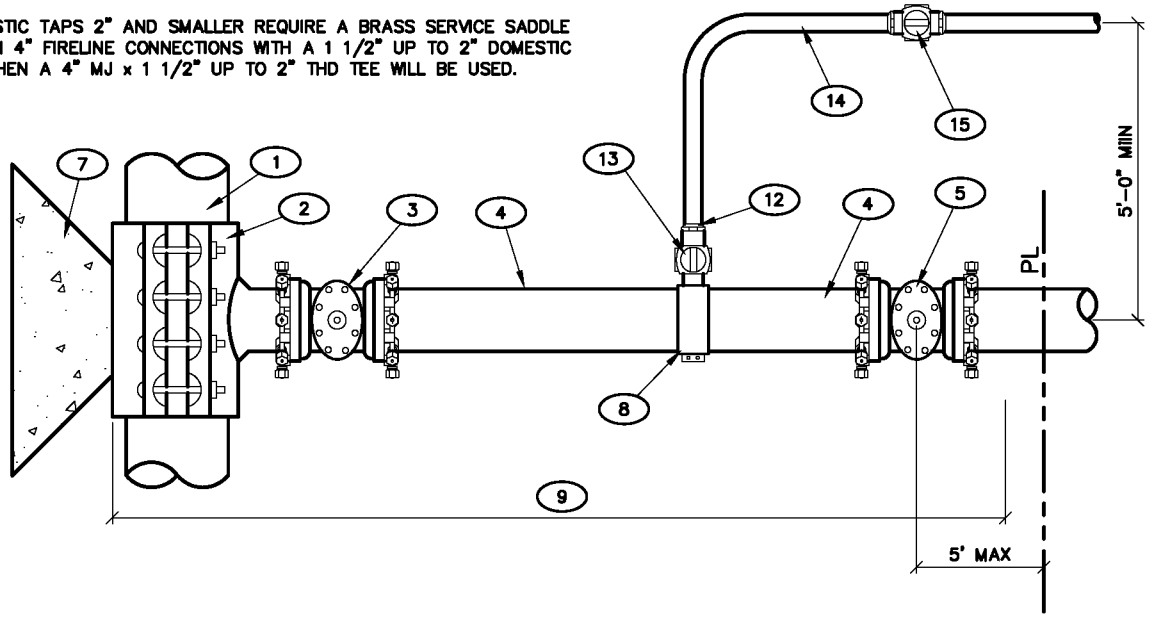

FIRELINE CONNECTION WITH DOMESTIC SERVICE TEE UP TO 2"

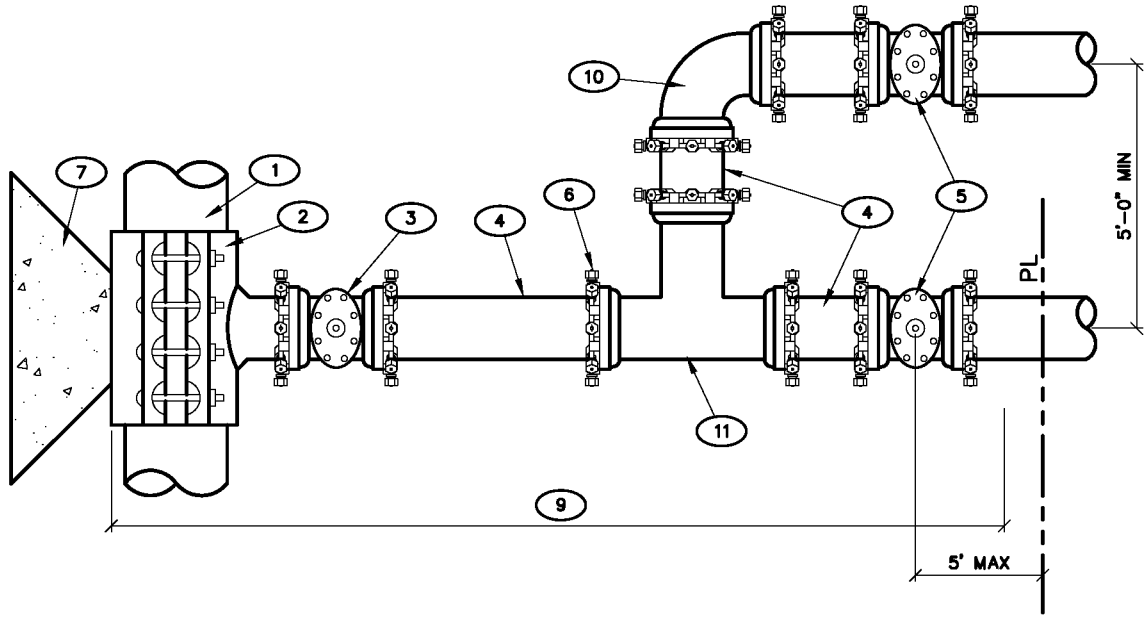

FIRELINE CONNECTION WITH DOMESTIC SERVICE TEE 3" AND LARGER

1. EXIST MAIN
2. TAPPING SLEEVE OR SWIVEL TEE
3. TAPPING VALVE OR MECHANICAL JOINT GATE VALVE
4. DI DBL SPIGOT PIPE
5. MECHANICAL JOINT GATE VALVE (2' FROM PL)
6. RESTRAINT DEVICE
7. CONC KICKBLOCK
8. BRASS SERVICE SADDLE
9. POLYETHYLENE WRAPPED
10. 90° FITTING
11. MJ TEE
12. SERVICE INSULATOR
13. CORP STOP (UP TO 2")
14. COPPER TUBING (UP TO 2")
15. CURB STOP

DENVER WATER
1600 West 12th Avenue • Denver, Colorado 80204
Phone(303)628-6000 • Telecopier No.(303)628-6851

FIRELINE CONNECTION WITH DOMESTIC SERVICE TEE

Scale: NONE	Date: JULY 1995	
Drawn: C.B.B.	Tr:	Ck:
Approved:	Dr. 127	No. 35

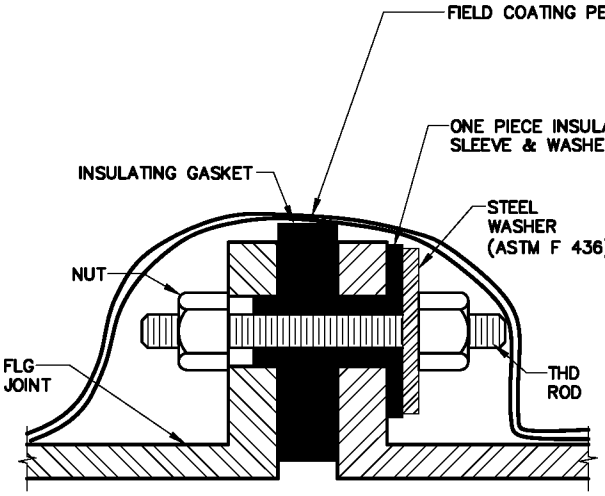

INSULATED JOINT

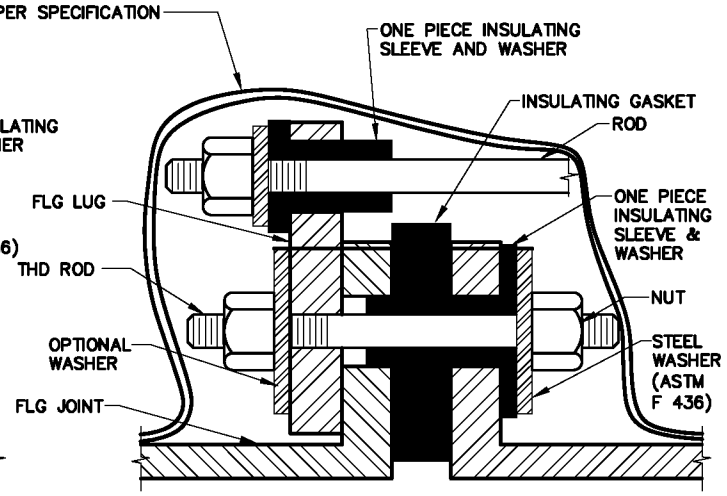

INSULATED ROD

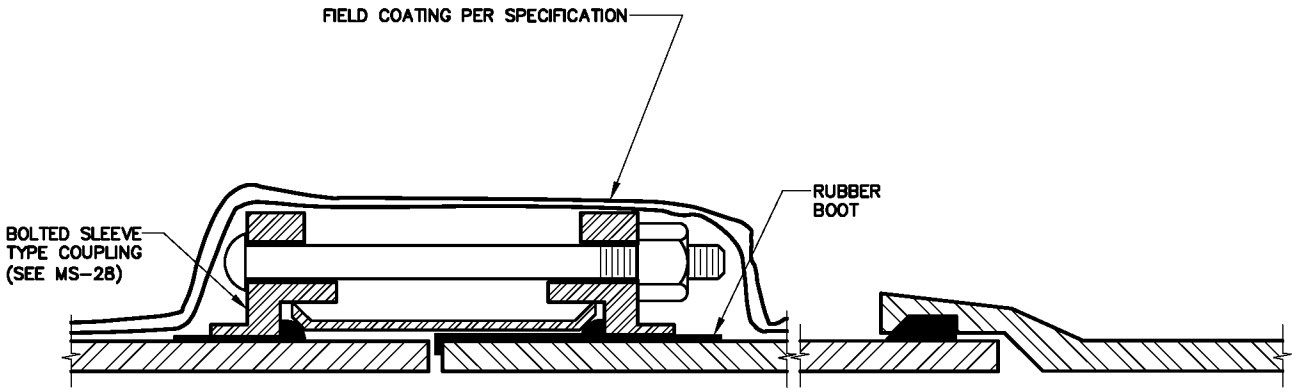

INSULATED BOLTED SLEEVE TYPE COUPLING

DENVER WATER
1600 West 12th Avenue · Denver, Colorado 80204
Phone(303)628-6000 · Telecopier No.(303)628-6851

INSULATED JOINTS, RODS AND BOLTED SLEEVE TYPE COUPLINGS

Scale: NONE	Date: JULY 1995	
Drawn: C.B.B.	Tr:	Ck:
Approved:	Dr. 127	No. 35

REVISED 2004

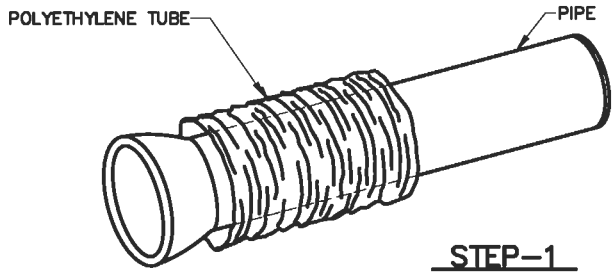

STEP–1

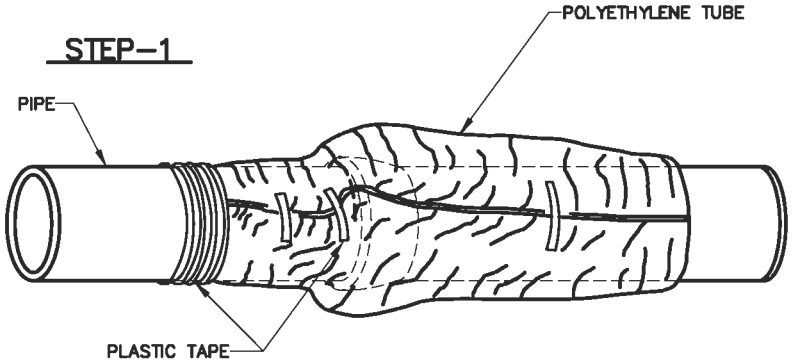

STEP–2

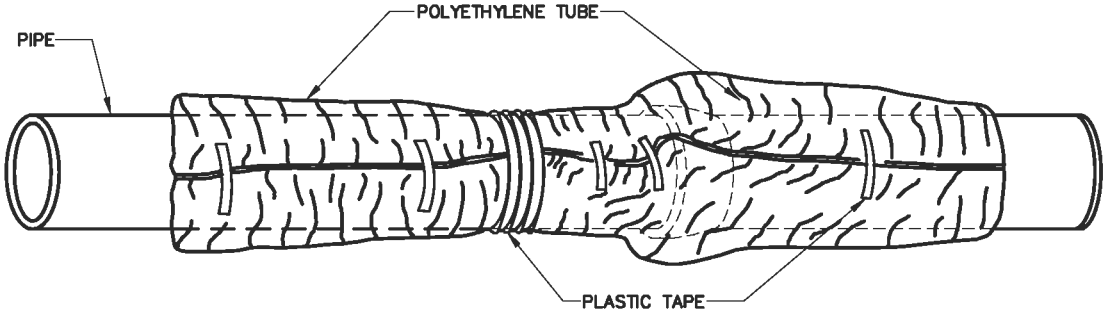

STEP–3

FIELD INSTALLATION–POLYETHYLENE WRAP

STEP–1 PLACE TUBE OF POLYETHYLENE MATERIAL AROUND PIPE PRIOR TO LOWERING PIPE INTO TRENCH.

STEP–2 PULL THE TUBE OVER THE LENGTH OF THE PIPE. TAPE TUBE TO PIPE AT JOINT. FOLD MATERIAL AROUND THE ADJACENT SPIGOT END AND WRAP WITH THREE CIRCUMFERENTIAL TURNS OF TWO–INCH WIDE PLASTIC TAPE TO HOLD PLASTIC TUBE AROUND SPIGOT END.

STEP–3 ADJACENT TUBE OVERLAPS FIRST TUBE AND IS SECURED WITH PLASTIC ADHESIVE TAPE. THE POLYETHYLENE TUBE MATERIAL COVERING THE PIPE WILL BE LOOSE. EXCESS MATERIAL SHALL BE NEATLY DRAWN UP AROUND THE PIPE BARREL, FOLDED INTO AN OVERLAP ON TOP OF THE PIPE AND HELD IN PLACE BY MEANS OF PIECES OF THE PLASTIC TAPE AT APPROXIMATELY THREE TO FIVE FT INTERVALS.

DENVER WATER
1600 West 12th Avenue • Denver, Colorado 80204
Phone(303)628–6000 • Telecopier No.(303)628–6851

POLYETHYLENE WRAP

Scale: NONE	Date: JULY 1995	
Drawn: C.B.B.	Tr:	Ck:
Approved:	Dr. 127	No. 35

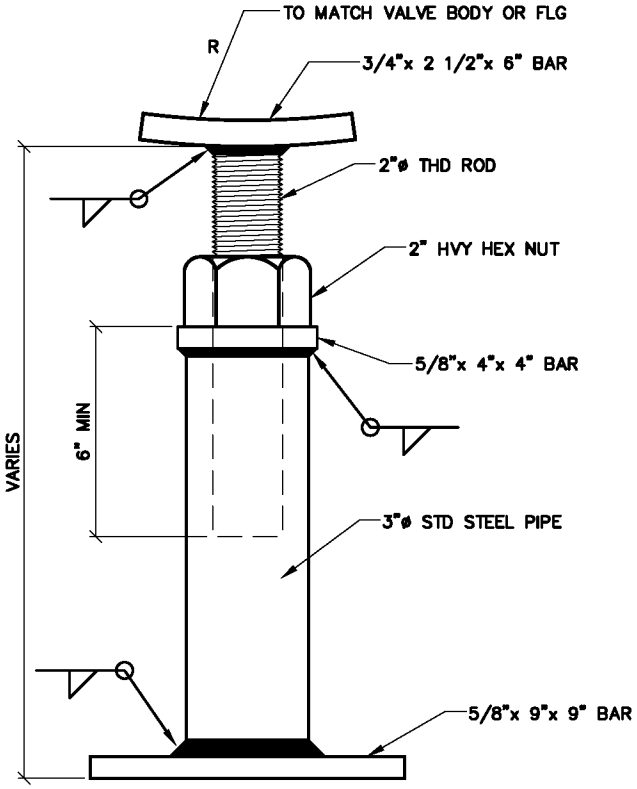

HEAVY DUTY

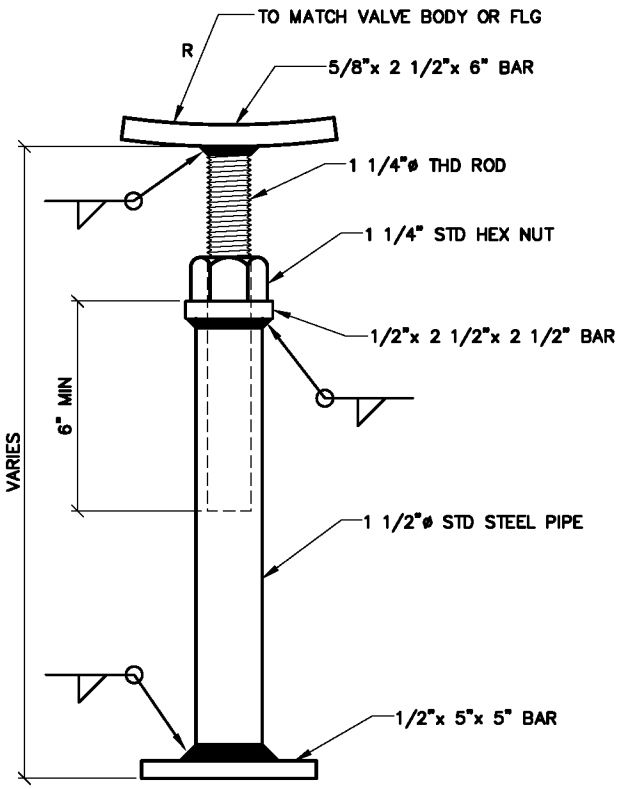

STANDARD

ADJUSTABLE – SUPPORT

DENVER WATER
1600 West 12th Avenue • Denver, Colorado 80204
Phone(303)628-6000 • Telecopier No.(303)628-6851

ADJUSTABLE STEEL PIPE VALVE SUPPORT

Scale: NONE	Date: JULY 1995	
Drawn: C.B.B.	Tr:	Ck:
Approved:	Dr. 127	No. 35

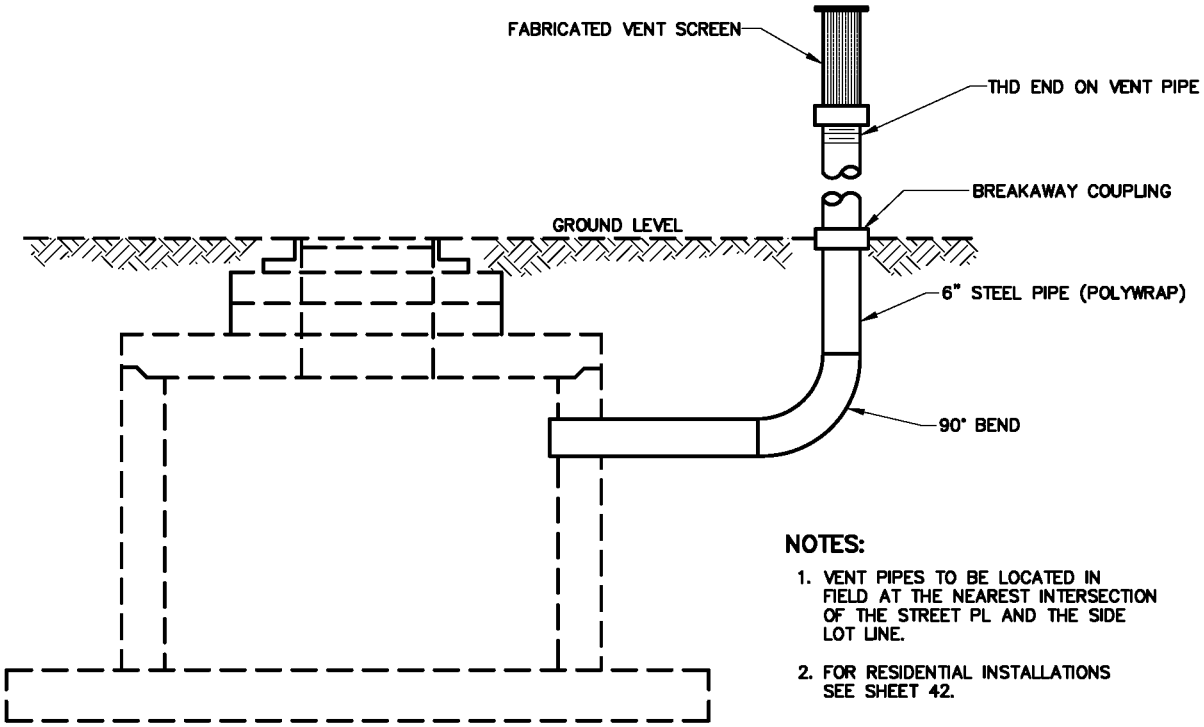

NOTES:

1. VENT PIPES TO BE LOCATED IN FIELD AT THE NEAREST INTERSECTION OF THE STREET PL AND THE SIDE LOT LINE.
2. FOR RESIDENTIAL INSTALLATIONS SEE SHEET 42.

VENT PIPE INSTALLATION

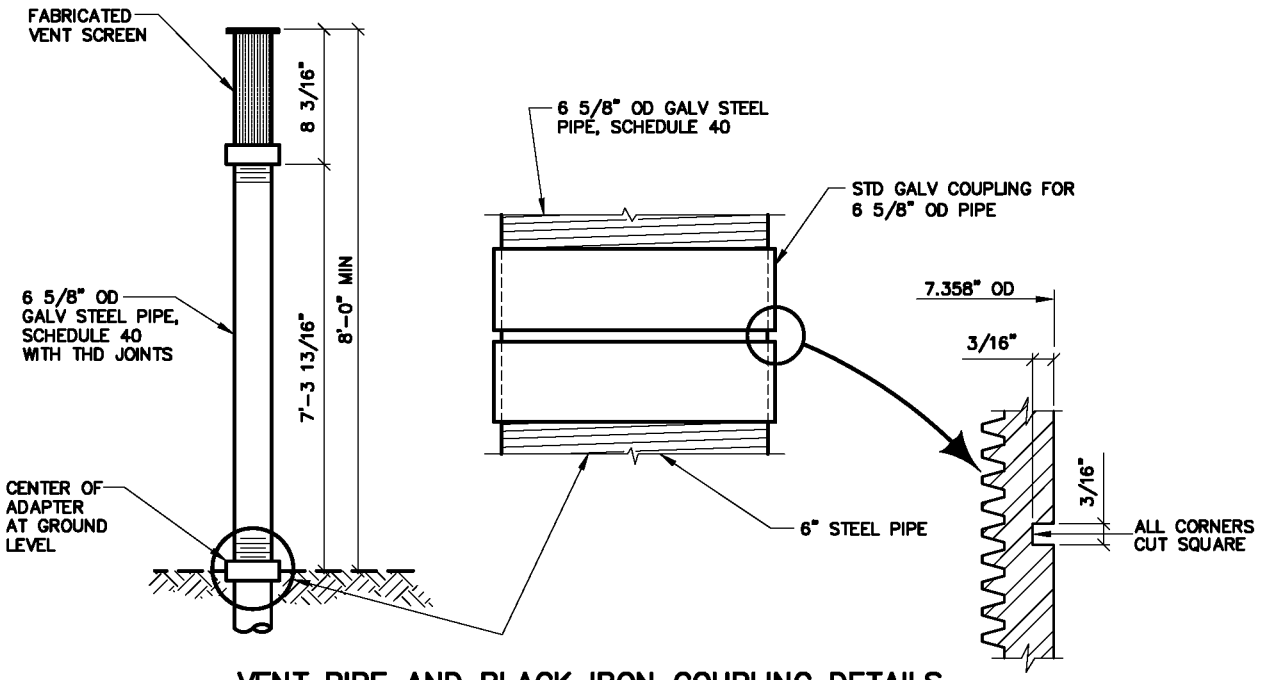

VENT PIPE AND BLACK IRON COUPLING DETAILS

DENVER WATER
1600 West 12th Avenue • Denver, Colorado 80204
Phone(303)628-6000 • Telecopier No.(303)628-6851

INDUSTRIAL VENT ASSEMBLY INSTALLATION AND DETAILS

Scale: NONE	Date: JULY 1995	
Drawn: C.B.B.	Tr:	Ck:
Approved:	Dr. 127	No. 35

REVISED 2004

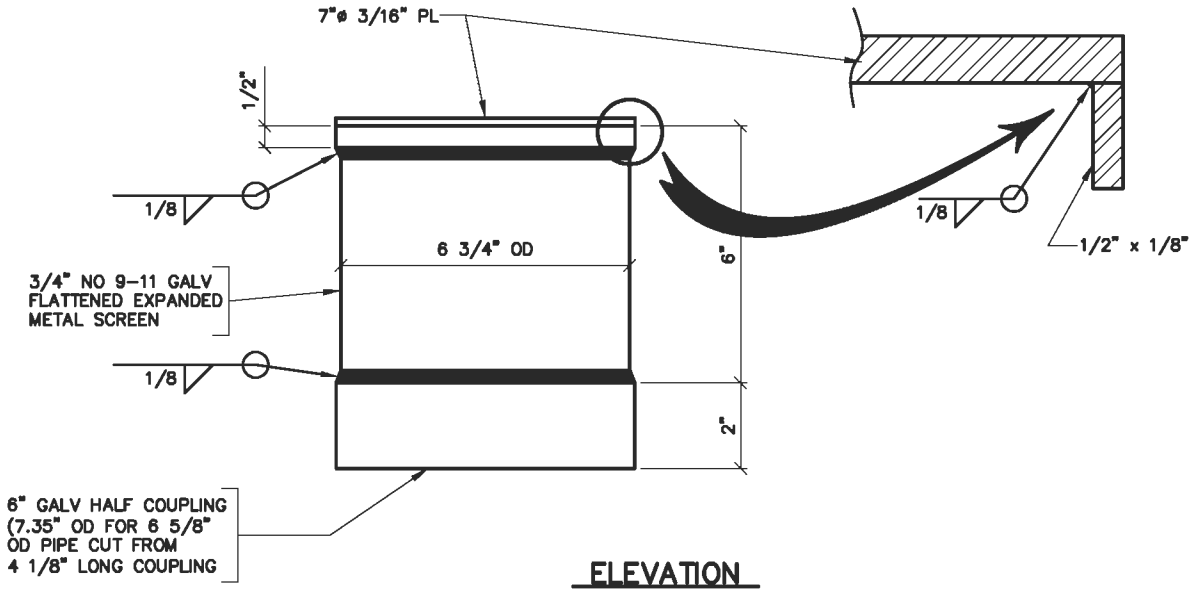

ELEVATION

SCREEN FOR 6" VENT PIPE

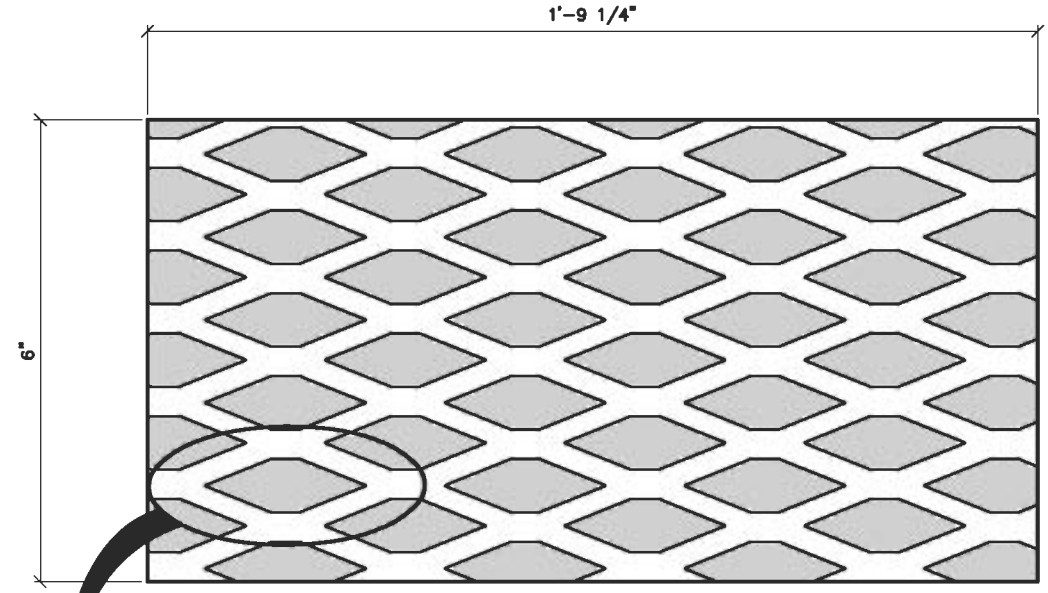

METAL SCREEN

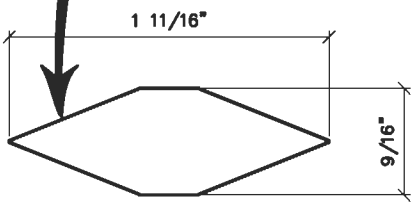

DENVER WATER
1600 West 12th Avenue • Denver, Colorado 80204
Phone(303)628-6000 • Telecopier No.(303)628-6851

INDUSTRIAL VENT ASSEMBLY VENT SCREEN

Scale: NONE		Date: JUNE 1995	
Drawn: C.B.B.	Tr:	Ck:	
Approved:		Dr. 127	No. 35

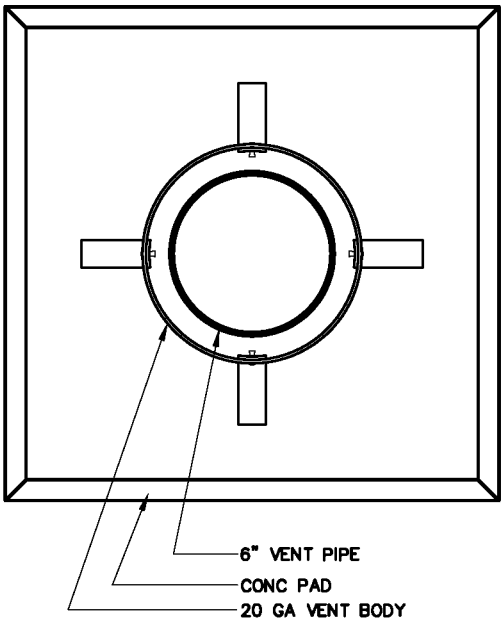

BASE DETAIL

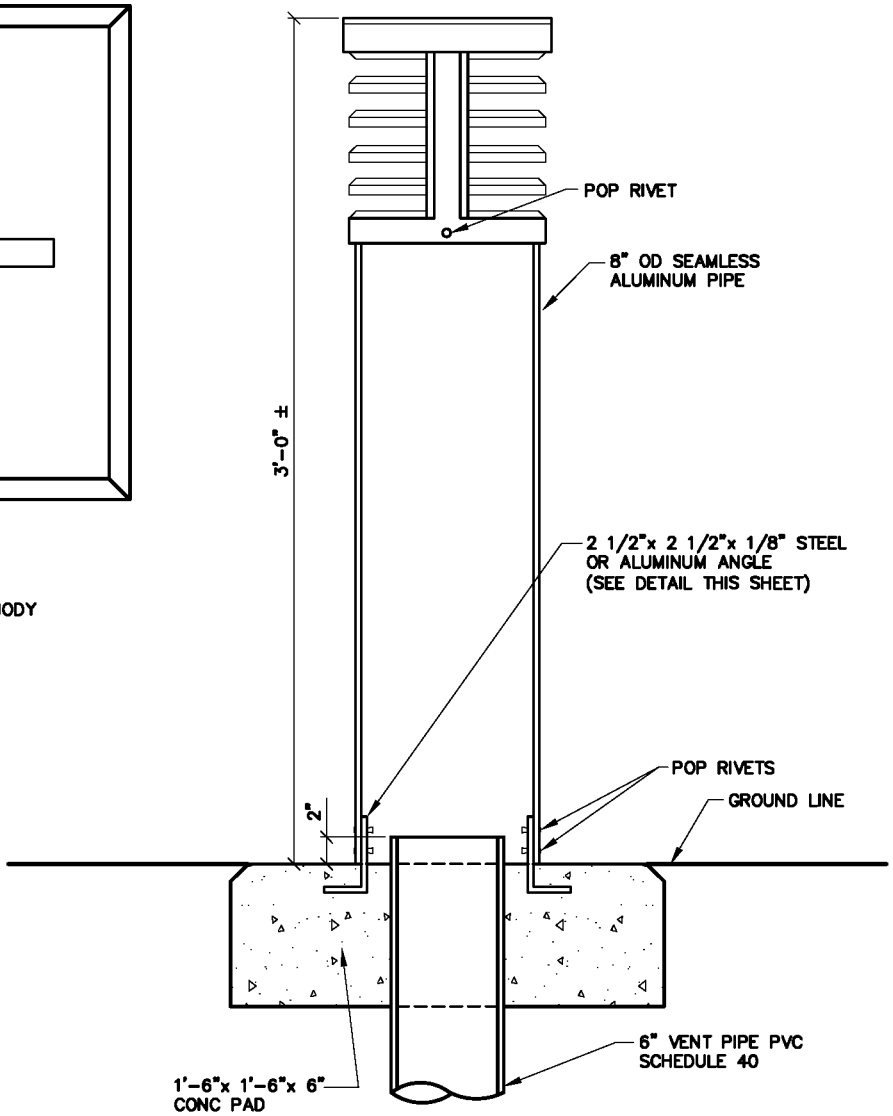

ROUND VENT SCREEN

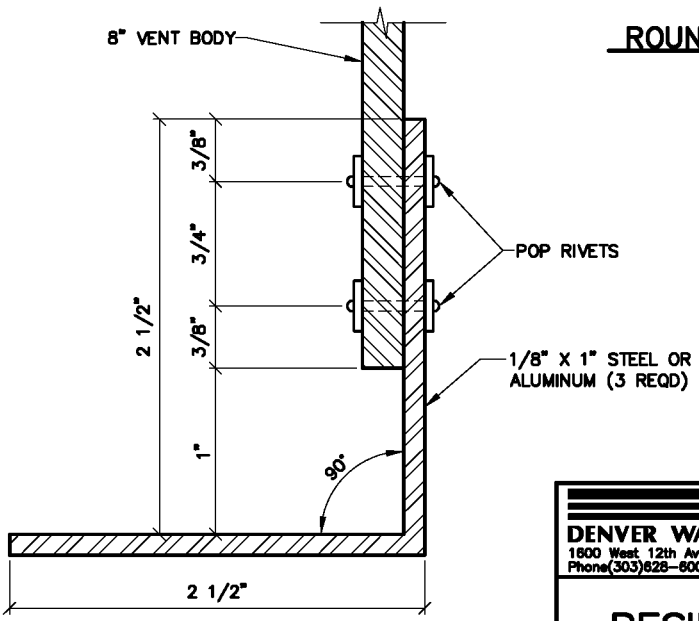

STEEL OR ALUMINUM ANGEL DETAIL

NOTE:
COLOR SHALL BE OLIVE GREEN OR FLAT BLACK TO MATCH SURROUNDINGS.

DENVER WATER
1600 West 12th Avenue • Denver, Colorado 80204
Phone(303)628-6000 • Telecopier No.(303)628-6851

RESIDENTIAL VENT ASSEMBLY

Scale: NONE		Date: JUNE 1995	
Drawn: C.B.B.	Tr:	Ck:	
Approved:		Dr. 127	No. 35

REVISED 2004

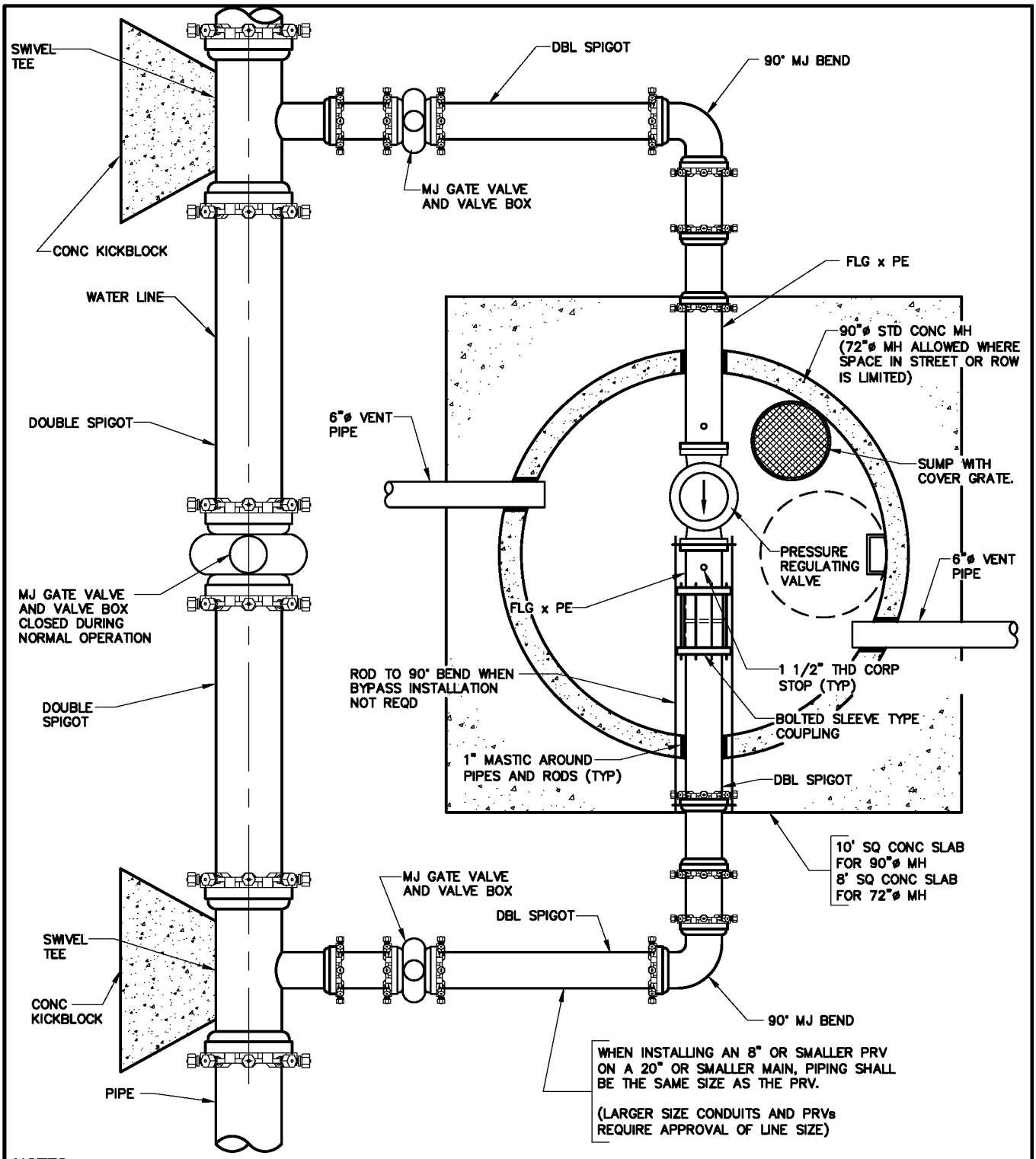

NOTES:

1. A RECTANGULAR VAULT IS REQD WHERE TELEMETRY OR ELECTRICAL EQUIPMENT IS ANTICIPATED INSIDE THE VAULT.
2. ACCESS STAIRS WITH DOOR OUTSIDE OF PAVEMENT MAY BE REQD ON STREETS WITH HEAVY TRAFFIC.
3. FOR CROSS SECTION VIEW, SEE CROSS SECTION SHEET 44.
4. DO NOT PLACE SUMP DIRECTLY UNDER MH.
5. THIS MH IS SUITABLE FOR CHECK VALVE INSTALLATIONS.
6. PIPING FOR PRV AND CHECK VALVE INSTALLATIONS SHALL BE DI.
7. LADDER RUNGS ARE REQD IN PRE-CAST MH. THE DISTANCE BETWEEN RUNGS, CLEATS, AND STEPS SHALL NOT EXCEED 12" AND SHALL BE UNIFORM THROUGHOUT THE LENGTH OF THE LADDER.

DENVER WATER
1600 West 12th Avenue·Denver, Colorado 80204
Phone(303)628-6000·Telecopier No.(303)628-6851

PRESSURE REGULATING VALVE MANHOLE INSTALLATION TYPICAL PLAN

Scale: NONE	Date: JULY 1995	
Drawn: C.B.B.	Tr:	Ck:
Approved:	Dr. 127	No. 35

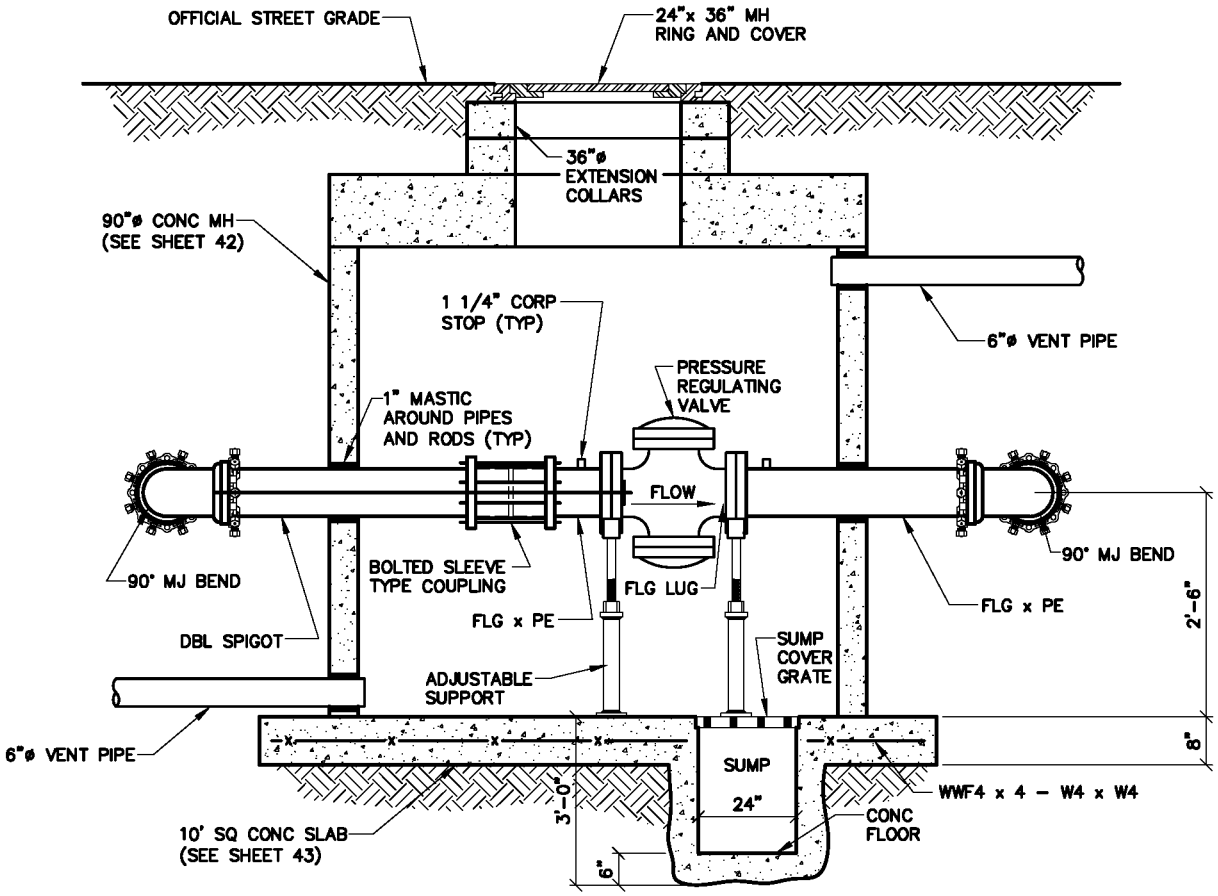

NOTE:
SEE SHEET 43 FOR PLAN
VIEW AND ADDITIONAL NOTES.

DENVER WATER
1600 West 12th Avenue · Denver, Colorado 80204
Phone(303)628-6000 · Telecopier No.(303)628-6851

PRESSURE REGULATING VALVE MANHOLE INSTALLATION CROSS SECTION

Scale: NONE	Date: AUGUST 1995	
Drawn: C.B.B.	Tr:	Ck:
Approved:	Dr. 127	No. 35

REVISED 2004

SHEET 44

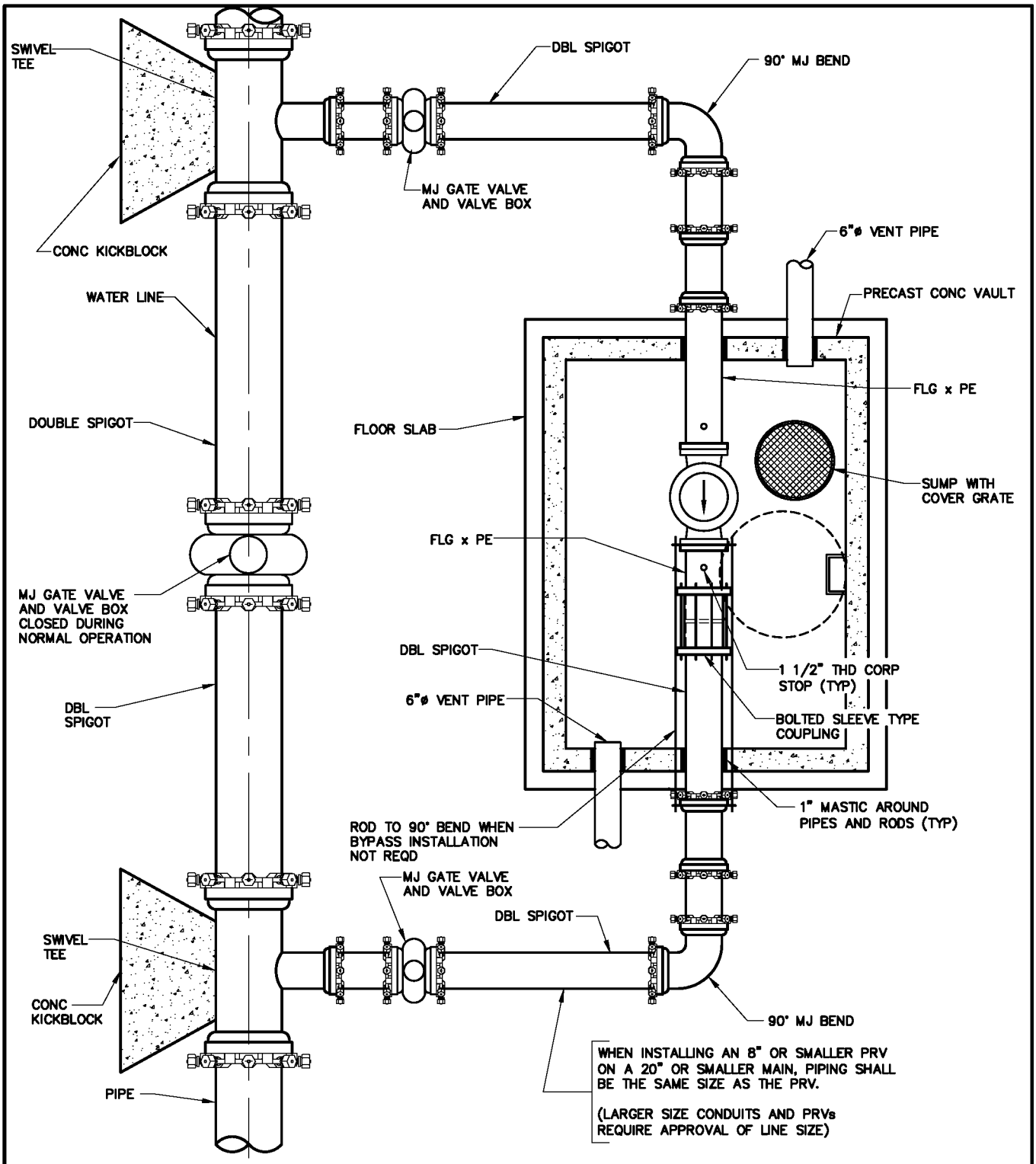

NOTES:

1. A RECTANGULAR VAULT IS REQD WHERE TELEMETRY OR ELECTRICAL EQUIPMENT IS ANTICIPATED INSIDE THE VAULT.
2. ACCESS STAIRS WITH DOOR OUTSIDE OF PAVEMENT MAY BE REQD ON STREETS WITH HEAVY TRAFFIC.
3. FOR CROSS SECTION VIEW, SEE CROSS SECTION SHEET 44.
4. DO NOT PLACE SUMP DIRECTLY UNDER MH.
5. THIS MH IS SUITABLE FOR CHECK VALVE INSTALLATIONS.
6. PIPING FOR PRV AND CHECK VALVE INSTALLATIONS SHALL BE DI.
7. LADDER RUNGS ARE REQD IN PRE-CAST MH. THE DISTANCE BETWEEN RUNGS, CLEATS, AND STEPS SHALL NOT EXCEED 12" AND SHALL BE UNIFORM THROUGHOUT THE LENGTH OF THE LADDER.

DENVER WATER
1600 West 12th Avenue·Denver, Colorado 80204
Phone(303)628-6000·Telecopier No.(303)628-6851

PRESSURE REGULATING VALVE RECTANGULAR VAULT TYPICAL PLAN

Scale: NONE	Date: JULY 1995	
Drawn: C.B.B.	Tr:	Ck:
Approved:	Dr. 127	No. 35

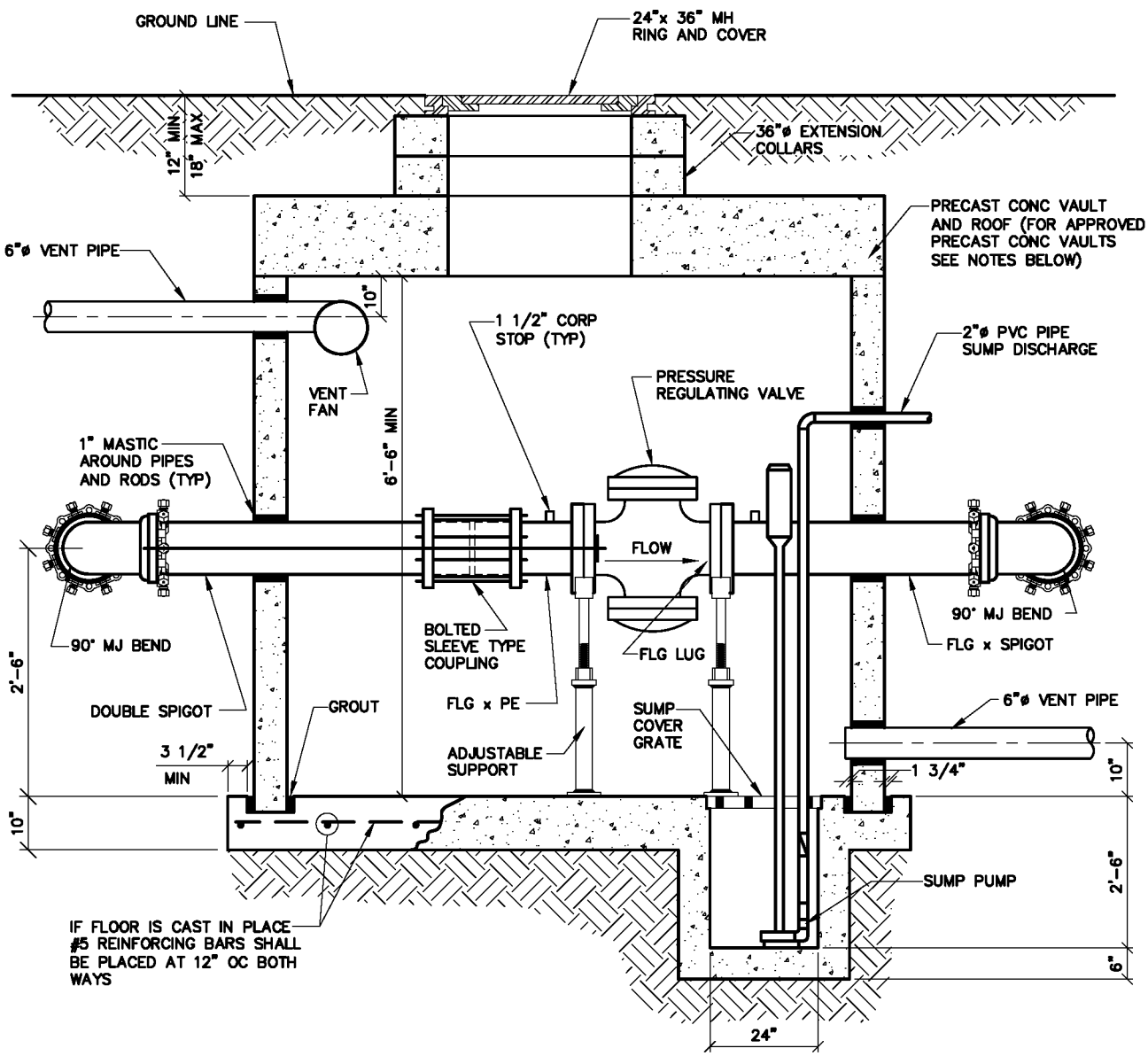

NOTES:

1. APPROVED PRECAST CONC VAULTS:
   AMCOR CONC INC– 10'x 10'x 7' 7080M, 7080–12.
   ADAMS CITY MFG 12', 6'x 8'–6", 7'x 12'–6"
2. SEE SHEET 45 FOR PLAN VIEW AND ADDITIONAL NOTES.

DENVER WATER
1600 West 12th Avenue • Denver, Colorado 80204
Phone(303)628–6000 • Telecopier No.(303)628–6851

PRESSURE REGULATING VALVE RECTANGULAR VAULT CROSS SECTION

Scale: NONE	Date: AUGUST 1995	
Drawn: C.B.B.	Tr:	Ck:
Approved:	Dr. 127	No. 35

GENERAL METER NOTES

1. METER LOCATION SHALL BE APPROVED BY DENVER WATER'S CUSTOMER SERVICE FIELD SECTION. METER SETTINGS LARGER THAN ONE INCH SHALL BE APPROVED IN THE FIELD BY THE METER SHOP PRIOR TO INSTALLATION OF ANY SERVICE PIPE OR TAP. CALL 303.628.6706 TO MAKE APPOINTMENT FOR ON-SITE APPROVAL MEETING.

2. METER PITS AND CURB STOPS SHALL BE LOCATED IN GRASSY LANDSCAPED AREAS, UNLESS OTHERWISE APPROVED PRIOR TO INSTALLATION BY THE CUSTOMER SERVICE FIELD SECTION. METER PITS MAY NOT BE PLACED IN DRIVEWAYS OR SIDEWALKS.

3. ALL METER SETTINGS LARGER THAN ONE INCH MUST BE INSPECTED BY CUSTOMER SERVICE FIELD SECTION BEFORE BEING BACKFILLED. METERS WILL NOT BE SET/APPROVED UNLESS METER SETTING AND SERVICE LINE ARE IN FULL COMPLIANCE WITH THE ENGINEERING STANDARDS, STANDARD DRAWINGS, AND APPROVED PROJECT DRAWINGS AS APPLICABLE.

4. IF STREET OR GROUND IS NOT TO FINAL GRADE AT TIME OF METER INSTALLATION OR INSPECTION, OWNER MUST RAISE OR LOWER THE METER PIT/VAULT WHEN FINAL GRADE IS ESTABLISHED. METER SETTING MUST BE ADJUSTED TO STANDARDS (EIGHT INCHES BELOW TOP METER PIT RING FOR METERS ONE INCH AND SMALLER, WITH PIT LID ONE HALF INCH BELOW FINISHED GRADE) AFTER PIT/VAULT GRADE IS ADJUSTED.

5. DOMESTIC WATER SERVICES SHALL RUN AT A NINETY DEGREE ANGLE FROM WATER MAIN WITH NO BENDS, NO CHANGES IN PIPE SIZE OR PIPE MATERIAL, AND NO CONNECTIONS UNTIL FIVE FEET PAST THE METER PIT OR VAULT (FOR INDOOR METERS, UNTIL FIVE FEET PAST THE CURB STOP). NO JOINTS ARE PERMITTED WITHIN THE METER PIT OR VAULT, EXCEPT AS SHOWN ON STANDARD DRAWINGS.

6. BYPASS IS REQUIRED ON ALL METERS ONE AND ONE HALF INCH AND LARGER, EXCEPT FOR IRRIGATION SERVICES. BYPASSES ARE NOT PERMITTED ON IRRIGATION SERVICES.

7. ALL MATERIALS USED FOR SERVICE PIPES, VALVES, METER SETTINGS AND METERS SHALL CONFORM TO APPLICABLE SECTIONS OF THE ENGINEERING STANDARDS, LATEST EDITION. ALL VARIANCES AND DEVIATIONS MUST BE APPROVED BY CUSTOMER SERVICE FIELD SECTION PRIOR TO INSTALLATION.

8. METERS SHALL BE FURNISHED WITH ITRON ERTS, WHICH WILL BE INSTALLED BY DENVER WATER AT TIME OF METER INSTALLATION OR INSPECTION.

9. IF METER PIT LOCATIONS DO NOT PERMIT DRIVE-BY RADIO READING FROM A PUBLIC STREET, IT MAY BE NECESSARY TO INSTALL A REMOTE ERT, WITH SUITABLE SIGNAL CABLE ENCASED IN CONDUIT FROM THE METER TO THE ERT, OR TO INSTALL ADDITIONAL RADIO EQUIPMENT SUCH AS AN ITRON MICRO NETWORK. OWNER SHALL PROVIDE A SUITABLE LOCATION, APPROVED BY DENVER WATER CUSTOMER SERVICE FIELD SECTION, FOR MOUNTING REMOTE ERT SUCH THAT AN ADEQUATE RADIO SIGNAL IS RECEIVED TO PERMIT DRIVE-BY METER READING FROM A DEDICATED PUBLIC STREET. ALL SUCH INSTALLATIONS SHALL BE AT THE OWNER'S EXPENSE.

10. ANY METER SETTING OTHER THAN THOSE SPECIFICALLY SHOWN AND DETAILED HEREIN SHALL BE CONSIDERED NON-STANDARD AND SHALL REQUIRE PRIOR APPROVAL BY CUSTOMER SERVICE FIELD SECTION, BASED ON DRAWINGS SHOWING ENTIRE SERVICE LINE, FITTINGS, METER SETTING, LOCATION OF NEAREST PUBLIC STREET, AND STRUCTURAL DESIGN OF VAULT. METERS AND VALVES IN PAVED AREAS REQUIRE SPECIAL MATERIALS AND CONSTRUCTION METHODS. METERS AND CURB STOPS/VALVES MAY NOT BE PLACED IN AREAS WHERE VEHICLES MAY PARK OVER THEM.

11. BACKFLOW PREVENTION DEVICES MAY BE REQUIRED IN CONFORMANCE WITH SECTION 6.11.

12. A FLOOR DRAIN IS REQUIRED WITHIN TEN FEET OF THE METER FOR ALL NEW INSIDE METER SETTINGS. INSIDE SETTINGS SHALL BE INSTALLED ONLY IN BASEMENTS OR IN UTILITY ROOMS IN BUILDINGS WITHOUT BASEMENTS.

13. INSIDE METER SETTINGS ARE ONLY PERMITTED WHERE TOTAL LENGTH OF SERVICE LINE, MEASURED ALONG CENTERLINE OF PIPE, DOES NOT EXCEED SIXTY FEET FROM TAP OR TEE ON STREET MAIN TO INLET OF METER.

14. ALL REFERENCES TO ELECTRONIC DIGITAL ENCODERS OR MECHANICALLY ENCODED REGISTERS WITH ITRON ERT ARE APPLICABLE TO DENVER, TOTAL SERVICE, AND READ AND BILL DISTRICTS ONLY. THIS REQUIREMENT IS NOT APPLICABLE TO MASTER METER DISTRICTS.

DENVER WATER
1600 West 12th Avenue • Denver, Colorado 80204
Phone(303)628-6000 • Telecopier No.(303)628-6851

GENERAL METER NOTES

Scale: NONE	Date: AUGUST 1995
Drawn: C.B.B.	Tr:	Ck:
Approved:	Dr. 127 No. 35

NOTES:

1. PLACEMENT OF STOP BOX CAN VARY FROM A MAX OF 5 FT OUTSIDE THE PL TO A MAX OF 5 FT INSIDE THE PL. PLACEMENT OF THE STOP BOX IN THE PUBLIC ROW IS PREFERRED.
2. IF THERE IS A TREE LAWN, BOTH CURB STOP AND METER PIT MUST BE LOCATED BETWEEN CURB AND SIDEWALK.
3. STOP BOX SHALL BE LOCATED IN A LANDSCAPED AREA, 24" FROM THE INLET SIDE OF THE METER PIT UNLESS PRIOR APPROVAL IS OBTAINED FROM CUSTOMER SERVICE FIELD SECTION. FOR CURB STOP LOCATED BENEATH PAVEMENT, USE ROADWAY BOX OVER STANDARD STOP BOX. CURB STOP CANNOT BE LOCATED BENEATH PARKING AREAS.
4. STOP BOX AND METER PIT MUST BE ACCESSIBLE AT ALL TIMES. DO NOT PLACE FENCE, RETAINING WALL OR OTHER OBSTRUCTION WITHIN 2 FT OF STOP BOX OR 5 FT OF METER PIT.
5. METER PIT/VAULT SHALL CONFORM WITH DETAILS ON SHEET 49 OR SHEET 55, AS APPLICABLE.
6. NO BENDS, FITTINGS, CONNECTIONS OR CHANGES IN PIPE SIZE ARE PERMITTED BETWEEN THE TAP AND A POINT WALL OF THE METER PIT.
7. DENVER WATER WILL REPAIR SERVICE LINE LEAKS BETWEEN THE CORPORATION STOP AND THE INLET TO THE CURB STOP ONLY. PROPERTY OWNER IS RESPONSIBLE FOR ALL OTHER SERVICE LINE REPAIRS OR REPLACEMENT FROM THE CORPORATION STOP ON THE WATER MAIN IN THE STREET.

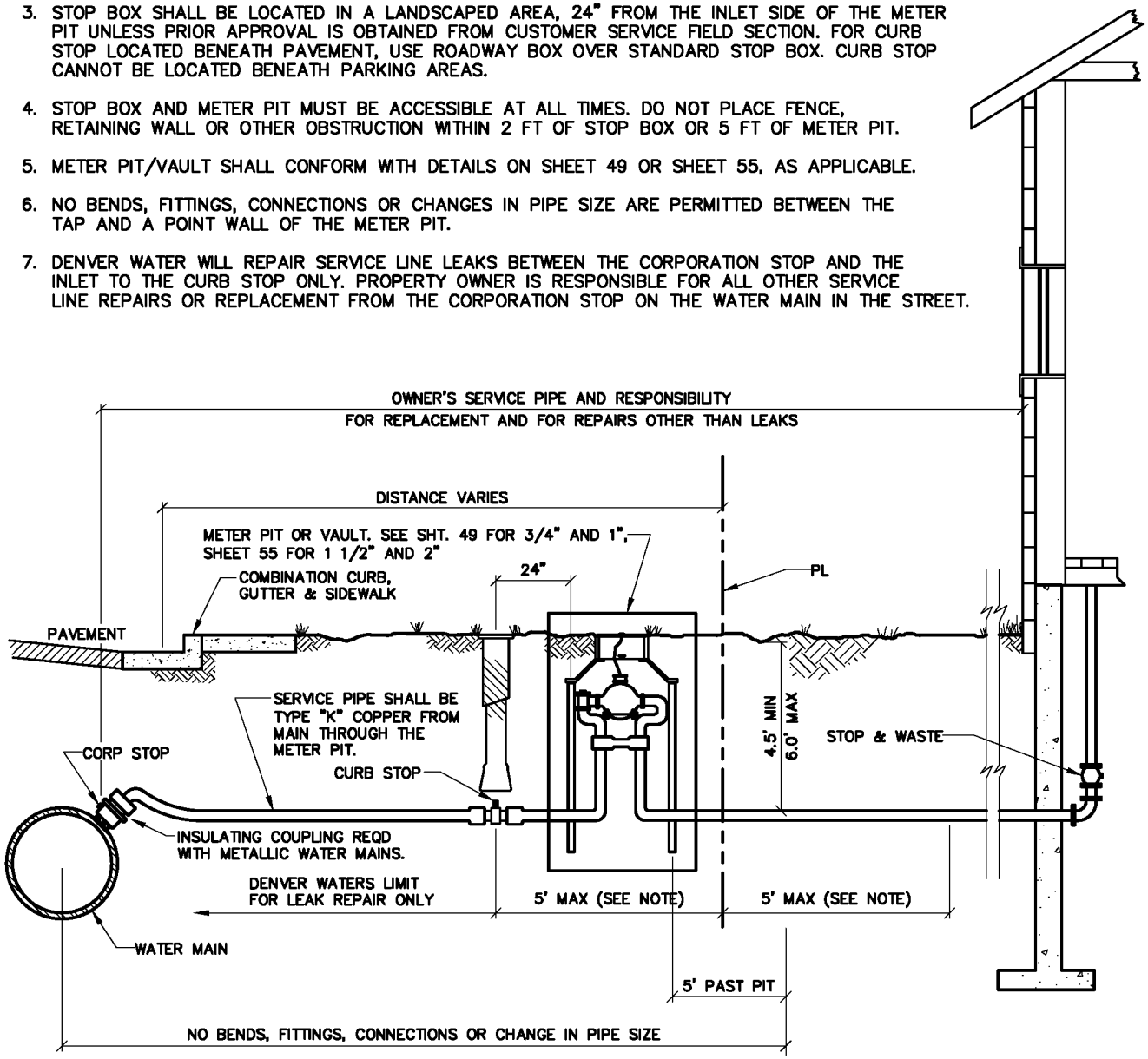

ANY VARIATION FROM THIS STANDARD REQUIRES APPROVAL PRIOR TO INSTALLATION FROM CUSTOMER SERVICE FIELD SECTION.

DENVER WATER
1600 West 12th Avenue • Denver, Colorado 80204
Phone(303)628-6000 • Telecopier No.(303)628-6851

SERVICE LINE, STOP BOX AND OUTSIDE METER INSTALLATION

Scale: NONE	Date: AUGUST 1995	
Drawn: C.B.B.	Tr:	Ck:
Approved:	Dr. 127	No. 35

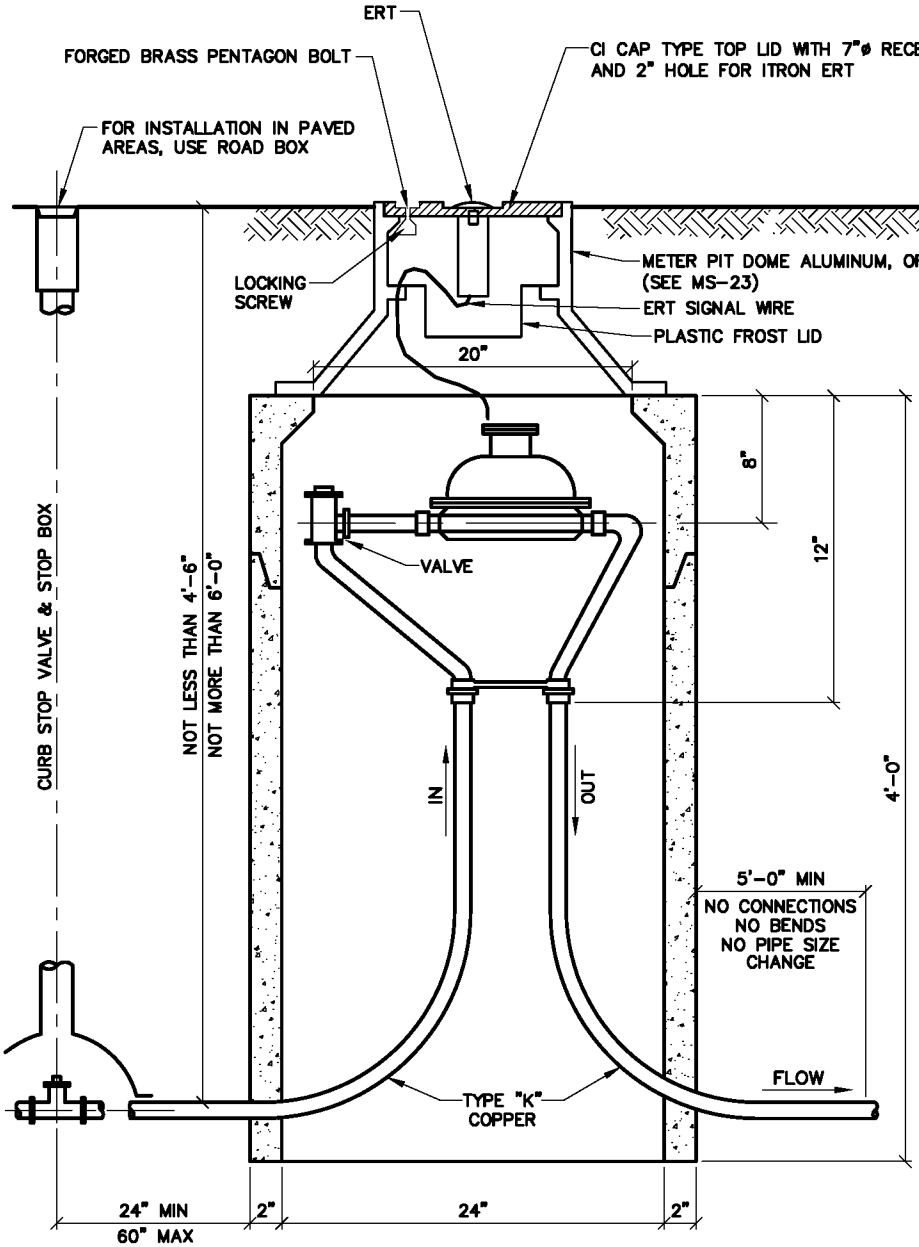

GENERAL NOTES:

1. ANY VARIATION OR DEVIATION FROM THIS STANDARD REQUIRES PREVIOUS APPROVAL PRIOR TO INSTALLATION FROM CUSTOMER SERVICE FIELD SECTION.
2. METER PIT MUST BE INSTALLED IN LANDSCAPED AREA. PRIOR APPROVAL REQD FOR INSTALLATIONS IN ROADWAYS, DRIVEWAYS OR SIDEWALKS. ROAD LIDS OR OTHER SPECIAL MODIFICATIONS MAY BE REQD.
3. CURB STOP SHALL BE 24 INCHES FROM INLET SIDE OF METER PIT, LOCATED IN LANDSCAPED AREA IF POSSIBLE. WITH PRIOR APPROVAL OF METER INSPECTOR, CURB STOP MAY BE PLACED BENEATH PAVED AREA UNDER ROADWAY BOX, BUT NOT IN A PARKING AREA.
4. ALL METER PITS SHALL BE FURNISHED WITH CI METER PIT LID WITH 7 1/2 INCH ø x 3/4 INCH DEEP RECESS AND 2 INCH ø CENTER HOLE FOR ITRON ERT, PLUS THREE DRAIN HOLES IN RECESSED AREA.
5. ALL METER PITS SHALL BE FURNISHED WITH PLASTIC FROST LID WITH 3 INCH DEEP PAN, FIVE DRAIN HOLES, LIFTING HANDLE, AND SLOT FOR ERT WIRE RUNNING FULL DEPTH OF LIP.
6. METER PIT SHALL BE CONSTRUCTED OF A COMBINATION OF CONC RINGS WITH A TOTAL HEIGHT OF 48 INCHES (SECTION 6.27). ADJUSTMENT RINGS OF APPROVED PLASTIC OR CONC SHALL BE INSERTED BETWEEN TOP RING AND DOME. RINGS MUST BE 2 INCH, 3 INCH, 4 INCH, OR 6 INCH HEIGHT. NO CONC FLOOR ALLOWED IN METER PITS. PLASTIC METER PITS ARE NOT PERMITTED. PIT SHALL BE INSTALLED TO MAINTAIN PIT LID 1/2 INCH BELOW FINISHED GRADE.
7. NO BENDS PERMITTED IN SERVICE LINE BETWEEN TAP AND 5 FT BEYOND OUTLET SIDE OF METER PIT. NO CHANGES IN PIPE ø OR CONNECTIONS OF ANY TYPE ARE PERMITTED IN THE SERVICE LINE UNTIL 5 FT OR MORE FROM THE OUTLET SIDE OF THE METER PIT.
8. METER SHALL BE FURNISHED WITH ELECTRONIC DIGITAL REGISTER OR ELECTRONIC ENCODED REGISTER AND AN ITRON PIT ERT. IN SPECIAL CASES, A REMOTE ERT MAY BE REQD, MOUNTED ON A NEARBY BUILDING OR POST.

DENVER WATER
1600 West 12th Avenue • Denver, Colorado 80204
Phone(303)628-6000 • Telecopier No.(303)628-6851

OUTSIDE SETTING FOR 3/4" & 1" METERS

Scale: NONE	Date: AUGUST 1995	
Drawn: C.B.B.	Tr:	Ck:
Approved:	Dr. 127	No. 35

NOTES:

1. PLACE STOP BOX WITHIN 5 FT EITHER SIDE OF PL. PLACEMENT OUTSIDE PL IS PREFERRED.
2. INDOOR METER SETTING IS PERMITTED ONLY IF TOTAL LENGTH OF SERVICE PIPE DOES NOT EXCEED 60 FT FROM MAIN TO METER SETTING.
3. INDOOR METER SHALL BE PLACED IN BASEMENT WITH FLOOR DRAIN NEARBY.
4. ITRON REMOTE ERT WILL BE MOUNTED BY DENVER WATER AT TIME METER IS SET. ERT IS USUALLY LOCATED NEAR BASEMENT CEILING ON OUTSIDE WALL FACING STREET. IF CONDITIONS INTERFERE WITH RADIO METER READING, ERT MAY BE MOUNTED ON OUTSIDE OF BUILDING FACING STREET.
5. NO BENDS, FITTINGS, CONNECTIONS, OR CHANGES IN PIPE SIZE PERMITTED ON TAP AND METER OUTLET VALVE, EXCEPT AS SHOWN.
6. PROPERTY OWNER OWNS ENTIRE SERVICE LINE FROM CORP STOP AT STREET MAIN. OWNER IS RESPONSIBLE FOR REPAIRING LEAKS BEGINNING AT THE CURB STOP. OWNER IS RESPONSIBLE FOR ALL OTHER REPAIRS OR SERVICE LINE REPLACEMENT BEGINNING AT THE MAIN. DENVER WATER WILL REPAIR SERVICE LINE LEAKS BETWEEN THE WATER MAIN AND THE OUTLET SIDE OF THE CURB STOP.
7. DENVER WATER IS NOT RESPONSIBLE FOR ANY DAMAGE THAT MAY OCCUR DUE TO A LEAK ANYWHERE ON THE SERVICE LINE. ALL DAMAGE IS THE RESPONSIBILITY OF THE OWNER OF THE PROPERTY.

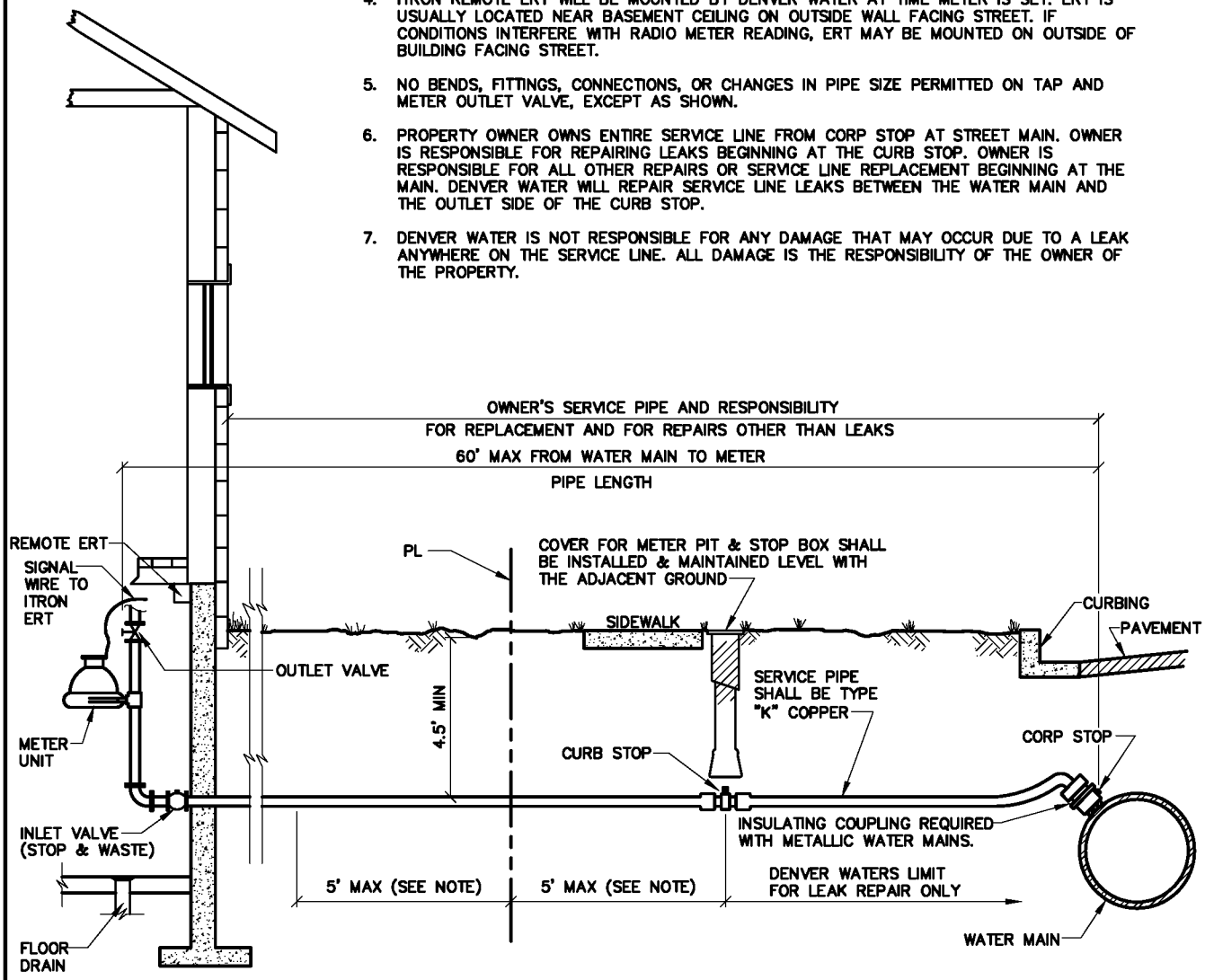

ANY VARIATION FROM THIS STANDARD REQUIRES APPROVAL PRIOR TO INSTALLATION FROM CUSTOMER SERVICE FIELD SECTION.

DENVER WATER
1600 West 12th Avenue • Denver, Colorado 80204
Phone(303)628-6000 • Telecopier No.(303)628-6851

SERVICE LINE, STOP BOX AND INSIDE METER INSTALLATION FOR 3/4" AND 1" METER

Scale: NONE	Date: AUGUST 1995	
Drawn: C.B.B.	Tr:	Ck:
Approved:	Dr. 127	No. 35

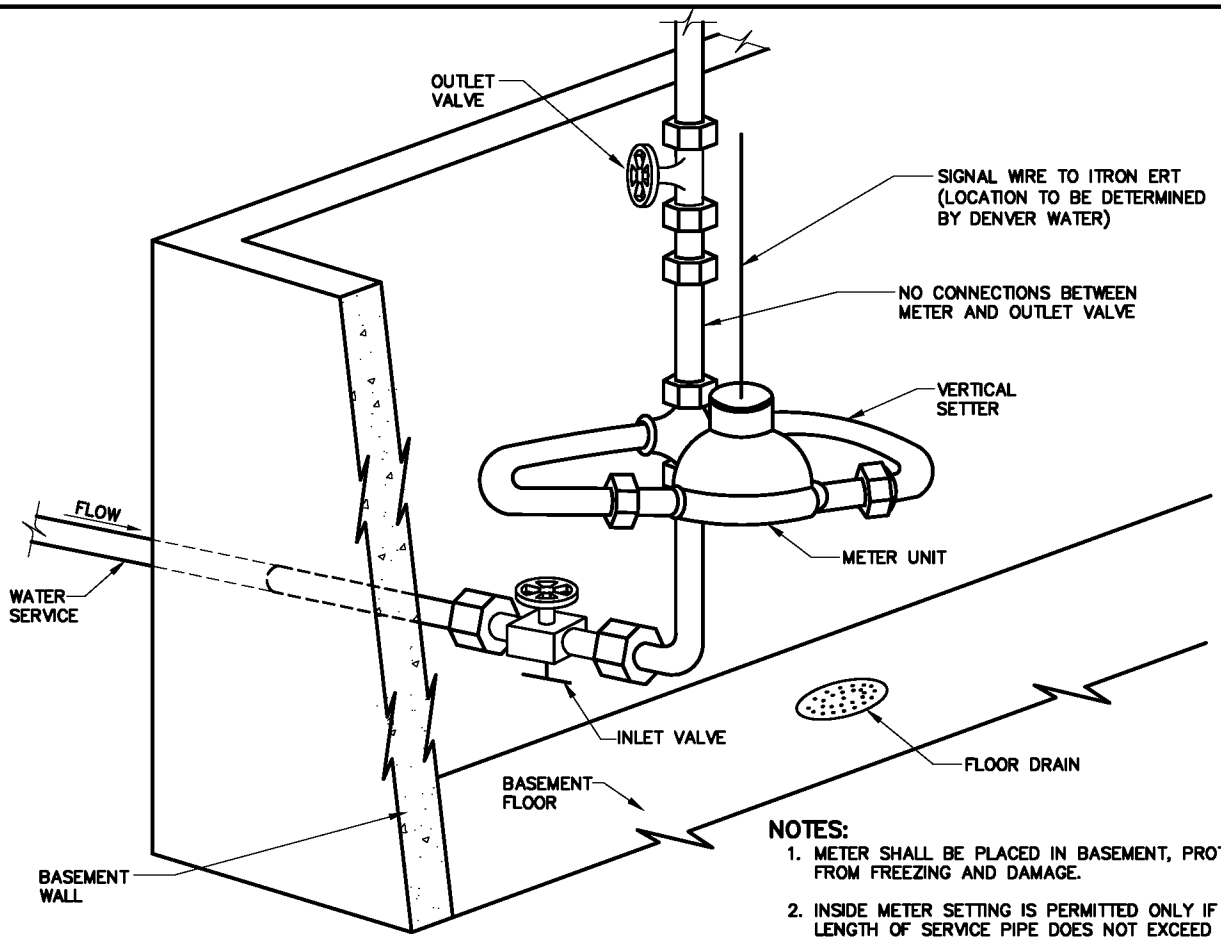

ISOMETRIC VIEW

NOTES:

1. METER SHALL BE PLACED IN BASEMENT, PROTECTED FROM FREEZING AND DAMAGE.
2. INSIDE METER SETTING IS PERMITTED ONLY IF TOTAL LENGTH OF SERVICE PIPE DOES NOT EXCEED 60 FT FROM MAIN TO METER SETTING.
3. A FLOOR DRAIN IS REQD WITHIN 10 FT OF THE METER FOR ALL NEW METER INSTALLATIONS (RECOMMENDED FOR EXISTING INSTALLATIONS).
4. NO CONNECTIONS ARE PERMITTED BEFORE THE METER OUTLET VALVE EXCEPT AS SHOWN ON THIS DRAWING.
5. METERS REQUIRE ELECTRONIC DIGITAL ENCODER REGISTER OR MECHANICALLY ENCODED REGISTER WITH ITRON REMOTE ERT AND 10 FT OF SIGNAL CABLE. ERT IS NORMALLY LOCATED NEAR BASEMENT CEILING AT WALL FACING STREET, BUT MAY BE MOUNTED ON OUTSIDE OF BUILDING.
6. IF METER IS BOXED IN OR PLACED BEHIND A WALL, PROVIDE ACCESS OPENING 36" WIDE FROM ABOVE OUTLET VALVE TO FLOOR.

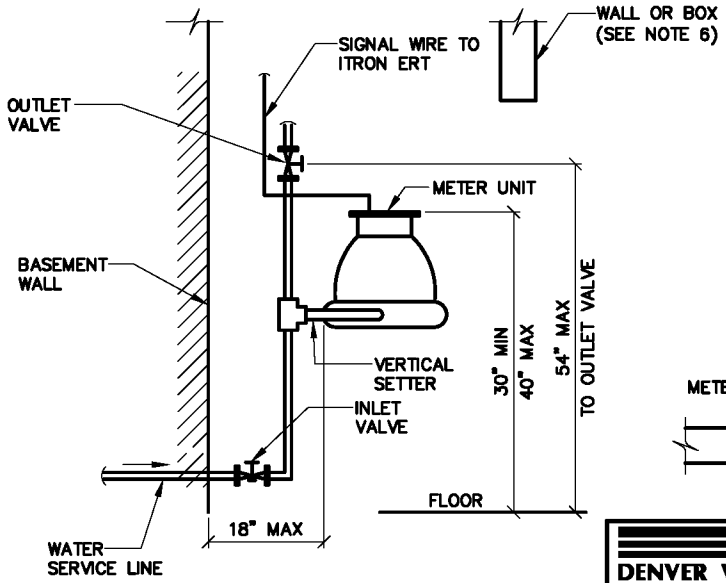

ELEVATION

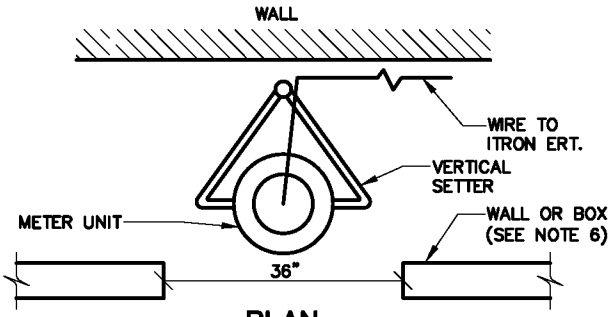

PLAN

DENVER WATER
1600 West 12th Avenue • Denver, Colorado 80204
Phone(303)628-6000 • Telecopier No.(303)628-6851

TYPICAL INSIDE SETTING FOR 3/4" AND 1" METER WITH AMR

Scale: NONE	Date: AUGUST 1995	
Drawn: C.B.B.	Tr:	Ck:
Approved:	Dr. 127	No. 35

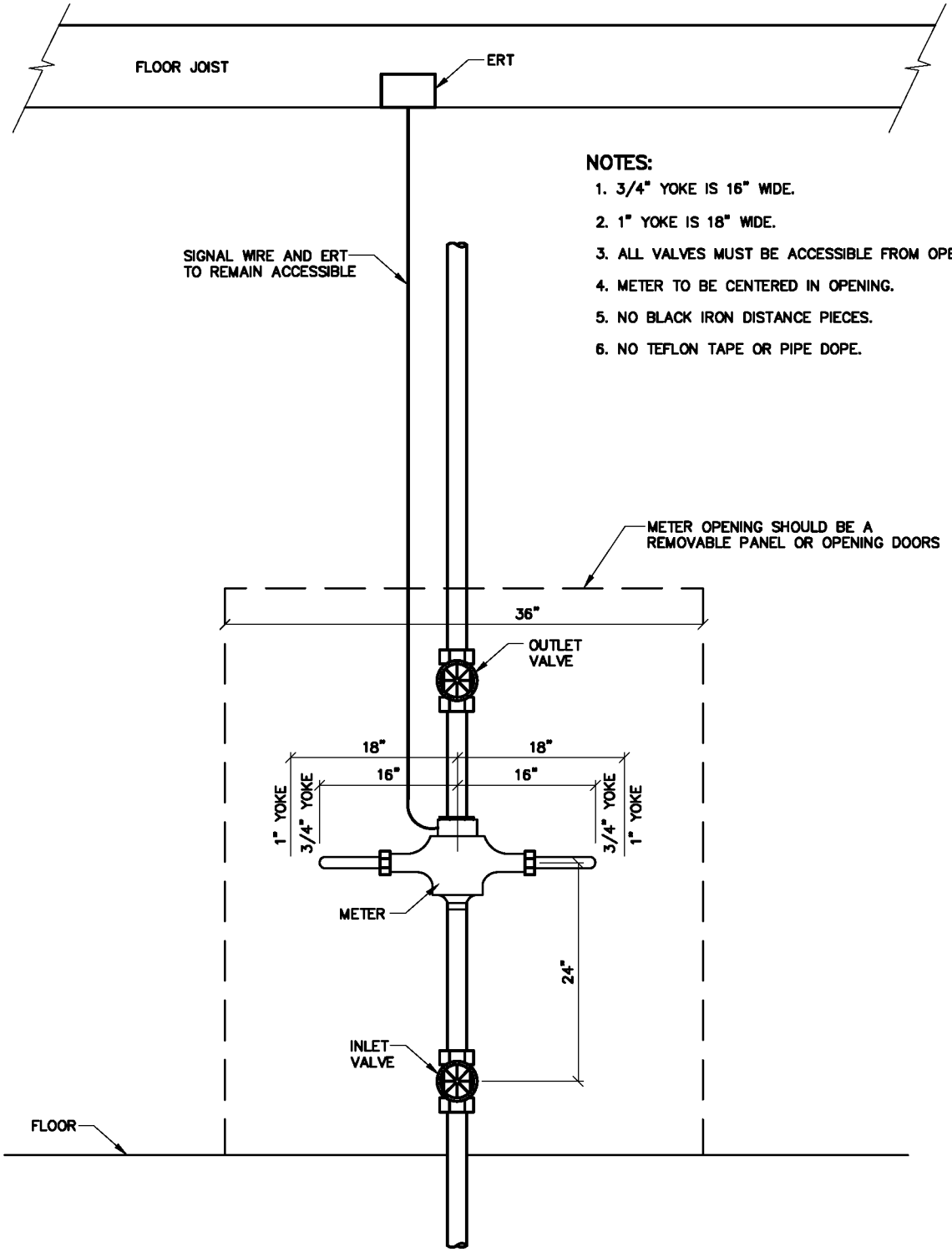

NOTES:

1. 3/4" YOKE IS 16" WIDE.
2. 1" YOKE IS 18" WIDE.
3. ALL VALVES MUST BE ACCESSIBLE FROM OPENING.
4. METER TO BE CENTERED IN OPENING.
5. NO BLACK IRON DISTANCE PIECES.
6. NO TEFLON TAPE OR PIPE DOPE.

DENVER WATER
1600 West 12th Avenue • Denver, Colorado 80204
Phone(303)628-6000 • Telecopier No.(303)628-6851

TYPICAL INSIDE SETTING FOR 3/4" AND 1" METER WITH AMR

Scale: NONE	Date: AUGUST 1995	
Drawn: C.B.B.	Tr:	Ck:
Approved:	Dr. 127	No. 35

REVISED 2004

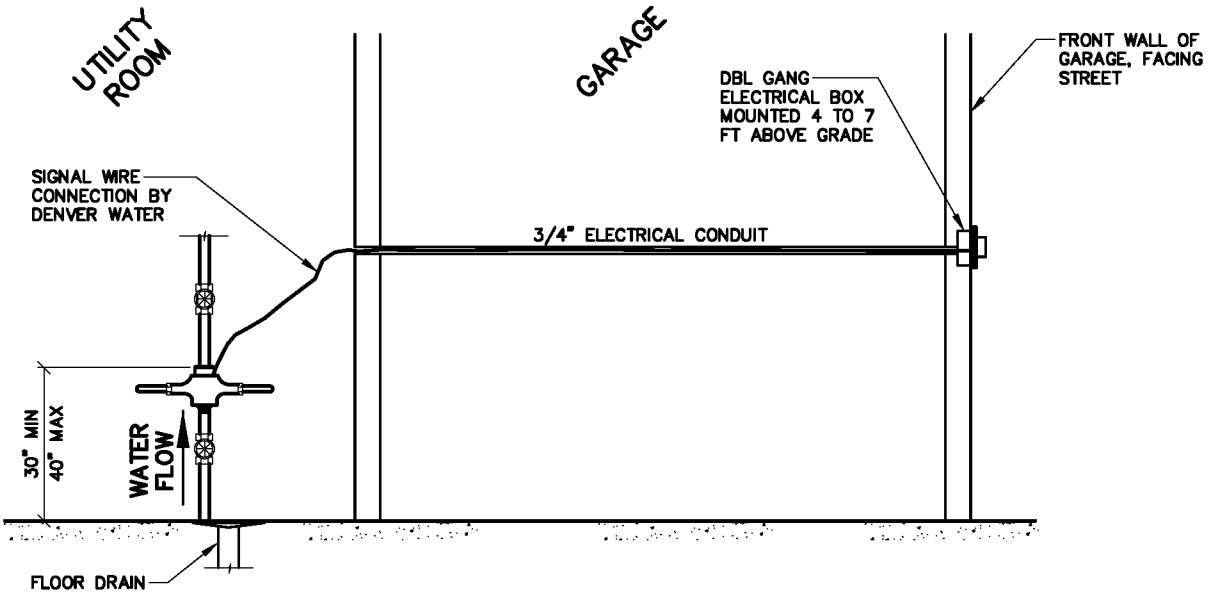

NOTES:

1. METER SHALL BE INSTALLED IN HEATED UTILITY ROOM WITH FLOOR DRAIN.
2. BUILDER INSTALLS ELECTRICAL CONDUIT AND DBL GANG ELECTRICAL BOX AS SHOWN. PULL SIGNAL CABLE TO WITHIN 5 FT OF METER LOCATION WITH OTHER END IN ELECTRICAL BOX.
3. DENVER WATER WILL CONNECT SIGNAL CABLE TO METER AND INSTALL ERT ON ELECTRICAL BOX.
4. SEE SHEETS 50, 51 AND 52 FOR SERVICE AND SETTING DETAILS.
5. TOTAL LENGTH OF SERVICE PIPE FROM TAP AT MAIN TO WATER METER CANNOT EXCEED 60 FT.
6. MAX LENGTH OF SIGNAL CABLE IS 150 FT.
7. SERVICE PIPE MAY NOT BE PLACED BENEATH FLOOR SLAB; PLACE METER WHERE PIPE ENTERS BUILDING FOOTPRINT.

DENVER WATER
1600 West 12th Avenue • Denver, Colorado 80204
Phone(303)628-6000 • Telecopier No.(303)628-6851

INSIDE METER SETTING AND REMOTE ERT INSTALLATION FOR HOME BUILT ON SLAB

Scale: NONE	Date: DECEMBER 2003	
Drawn: C.B.B.	Tr:	Ck:
Approved:	Dr. 127	No. 35

NOTE:

IF WIRE LENGTH EXCEEDS 150 FT ONLY BADGER METER MAY BE USED.

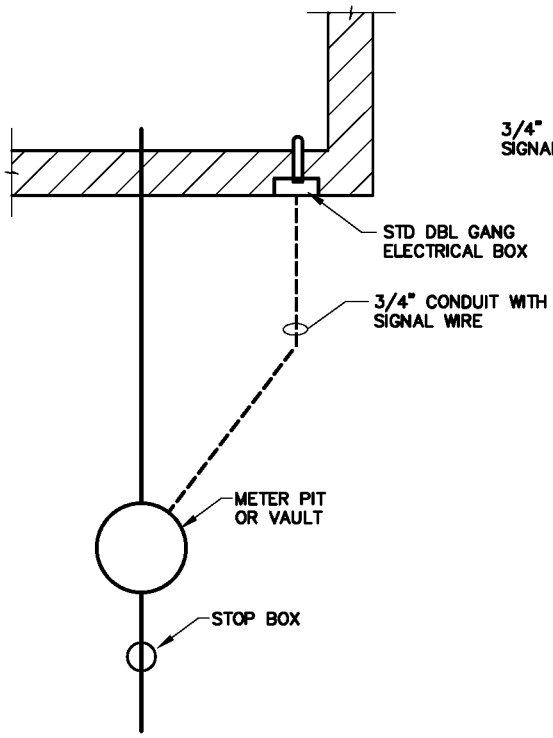

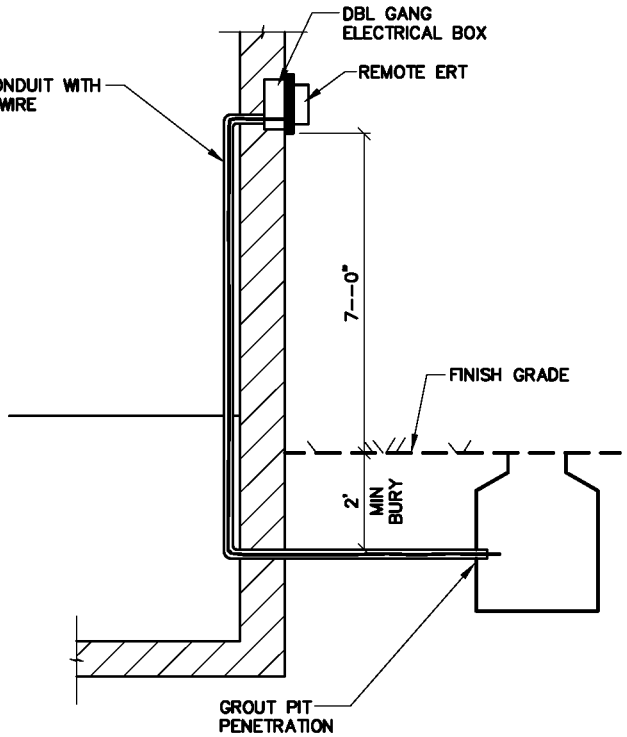

DENVER WATER
1600 West 12th Avenue · Denver, Colorado 80204
Phone(303)628-6000 · Telecopier No.(303)628-6851

METER PIT WITH REMOTE ERT INSTALLATION ON OUTSIDE BUILDING WALL

Scale: NONE	Date: DECEMBER 2003	
Drawn: C.B.B.	Tr:	Ck:
Approved:	Dr. 127	No. 35

REVISED 4-2004

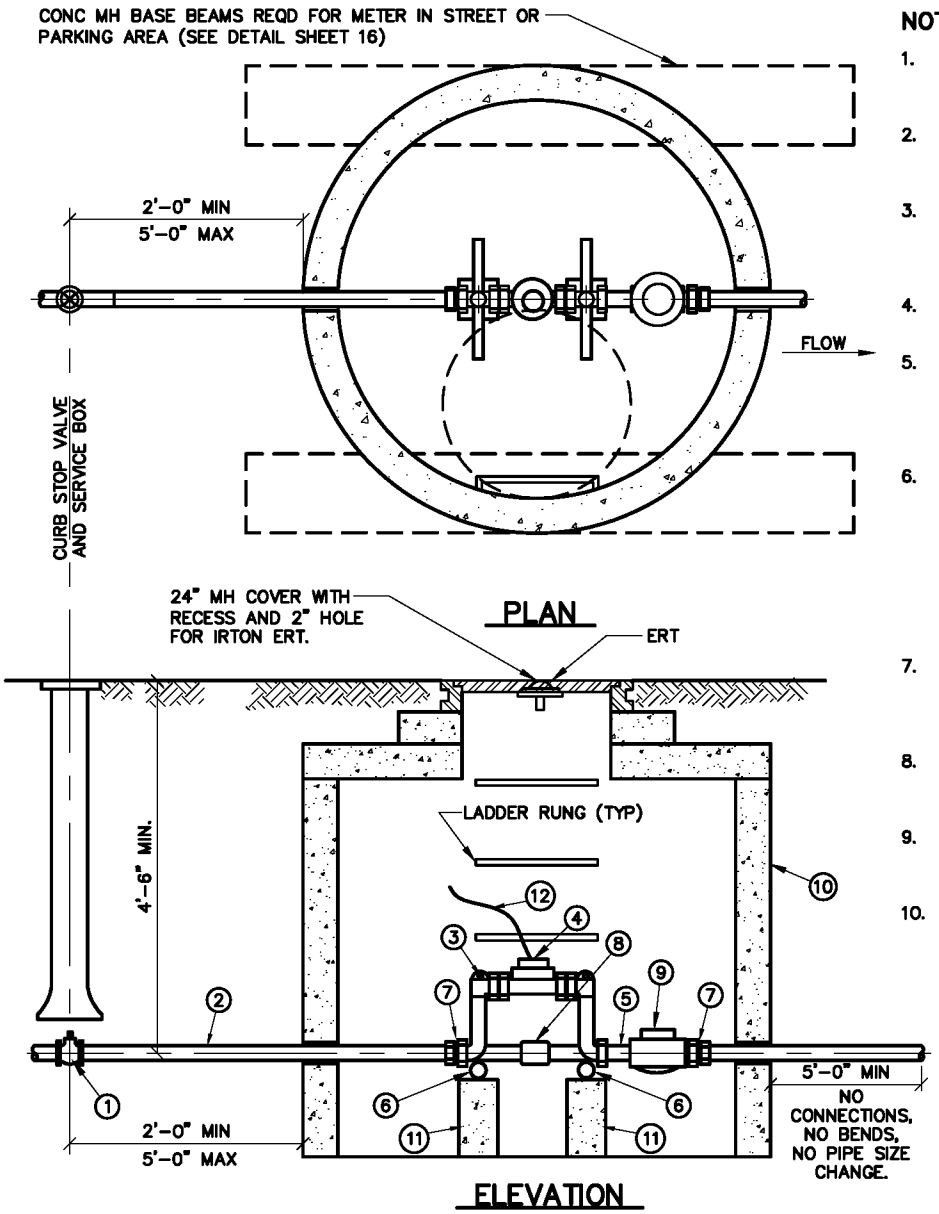

NOTES:

1. METER VAULT SHALL BE INSTALLED IN LANDSCAPED AREA UNLESS APPROVED BY METER INSPECTOR.
2. CURB STOP SHALL BE 24" TO 60" FROM THE INLET SIDE OF THE METER VAULT, IN LANDSCAPED AREA.
3. FOR VAULT INSTALLATIONS IN ROADWAYS AND DRIVEWAYS, WHEN APPROVED, MH BASE BEAMS ARE REQD. METER VAULT MAY NOT BE INSTALLED IN PARKING AREA.
4. NO CONC FLOOR ALLOWED IN METER VAULT.
5. NO CONNECTIONS OF ANY TYPE, PIPE BENDS, OR CHANGES IN PIPE SIZE ARE PERMITTED BETWEEN THE TAP AND 5 FT BEYOND THE OUTLET SIDE OF THE METER VAULT, EXCEPT AS SHOWN ON THIS DETAIL.
6. METER SHALL BE FURNISHED WITH ELECTRONIC DIGITAL REGISTER OR ELECTRONIC ENCODED REGISTER AND AN ITRON PIT ERT. 24" MH LID SHALL HAVE 7" ø RECESS AND 2"ø HOLE TO ACCOMMODATE PIT ERT. IN SPECIAL CIRCUMSTANCES, REMOTE ERT MAY BE REQD (SEE SHEET 50), TO BE INSTALLED ON NEARBY BUILDING OR POST.
7. JOINTS INSIDE METER VAULT SHALL BE THD OR SHALL BE SOLDERED WITH 95-5 TIN/ANTIMONY SOLDER IN ACCORDANCE WITH ASTM B 32.
8. DISTANCE BETWEEN RUNGS, CLEATS AND STEPS SHALL NOT EXCEED 12" AND SHALL BE UNIFORM THROUGHOUT THE LENGTH OF THE LADDER.
9. VAULT WALL PENETRATIONS SHALL BE GROUTED WITH CONC.
10. COPPERSETTER OR METER YOKE SHALL BE NO MORE THAN 12" HIGH. IRRIGATION SERVICE INSTALLATIONS SHALL NOT HAVE METER BYPASS. ALL OTHER SERVICES SHALL USE COPPERSETTER OR YOKE WITH BYPASS AND LOCKING BYPASS VALVE.

DETAILS:

1. CURB STOP
2. TYPE K COPPER TUBING
3. 12" COPPERSETTER / METER YOKE WITH BYPASS
4. METER UNIT
5. 3" NIPPLE BETWEEN COPPERSETTER AND CHECK VALVE
6. 1" x 23" PIPE
7. IRON PIPE TO FLARE COUPLING FROM INLET SIDE OF COPPERSETTER AND OUTLET SIDE OF CHECK VALVE
8. BY-PASS WILL BE 1" FOR 1 1/2" COPPERSETTERS AND 1 1/2" OR 1 1/4" FOR 2" COPPERSETTERS- NO BYPASS FOR IRRIGATION METERS
9. CHECK VALVE (CHECK VALVES ARE NOT REQUIRED WHERE A BACKFLOW PREVENTION DEVICE IS INSTALLED)
10. 48" CONC MH WITH FLAT LID
11. CONC BLOCK SUPPORTS 4" x 4" x 24"
12. SIGNAL WIRE TO ITRON ERT

DENVER WATER
1600 West 12th Avenue • Denver, Colorado 80204
Phone(303)628-6000 • Telecopier No.(303)628-6851

OUTSIDE SETTING FOR 1-1/2" AND 2" METER WITH CHECK VALVE AND BYPASS IN MANHOLE

Scale: NONE	Date: NOV. 1995	
Drawn: RVM	Tr:	Ck:
Approved:	Dr. 127	No. 35

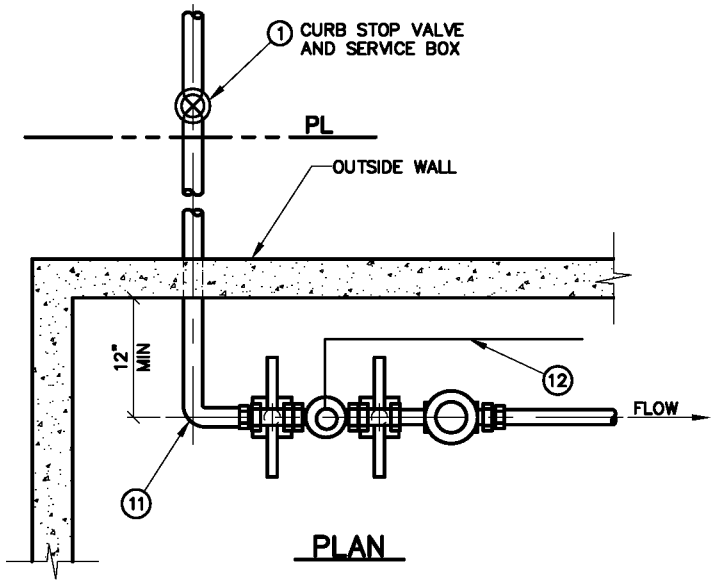

PLAN

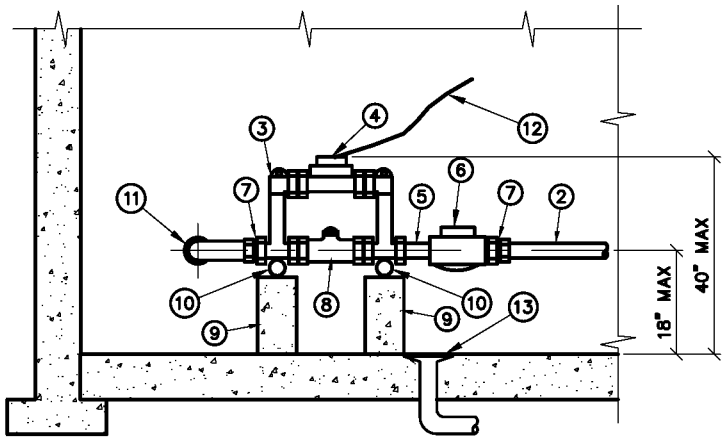

ELEVATION

NOTES:

1. PIPE JOINT SHALL BE THRD OR SOLDERED WITH 95-5 TIN/ANTIMONY SOLDER.
2. INSTALLATION MUST ALLOW FOR FULL ACCESS TO METER AND VALVES, AND PROVIDE PROTECTION FROM FREEZING.
3. SEE SHEET 45 FOR ADDITIONAL NOTES.
4. A FLOOR DRAIN SHALL BE PLACED NEAR THE METER INSTALLATION.
5. METER SUPPORT MAY BE EITHER CONC OR UNISTRUT ATTACHED TO WALL.
6. ALL METERS MUST BE FURNISHED WITH AND ELECTRONIC DIGITAL ENCODER REGISTER OR MECHANICALLY ENCODED REGISTER, AND WITH AN ITRON REMOTE ERT.
7. ERT WILL BE INSTALLED AT A LOCATION DETERMINED BY DENVER WATER AT TIME OF METER INSPECTION. IN MOST CASES, ERT WILL BE INSTALLED ON THE OUTSIDE OF THE BUILDING FACING A PUBLIC STREET. IF ERT IS MORE THAN 20 FT FROM METER LOCATION, OWNER MUST PROVIDE CONDUIT AND SIGNAL WIRE FROM METER TO ERT LOCATION. (SEE SHEET 53 FOR DETAIL OF CONDUIT AND OUTSIDE ERT MOUNTING).
8. INSIDE METER SETTINGS ARE PERMITTED ONLY WHEN THE TOTAL LENGTH OF SERVICE PIPE FROM MAIN TO METER SETTING DOES NOT EXCEED 60 FT.
9. BYPASS NOT PERMITTED ON IRRIGATION SERVICES.

DETAILS:

1. CURB STOP
2. TYPE K COPPER TUBING
3. 12" COPPERSETTER / METER YOKE
4. METER UNIT
5. 3" NIPPLE BETWEEN COPPERSETTER AND CHECK VALVE
6. CHECK VALVE
7. IRON PIPE TO FLARE COUPLING FROM INLET SIDE OF COPPERSETTER AND OUTLET SIDE OF CHECK VALVE
8. BY-PASS WILL BE 1" FOR 1 1/2" COPPERSETTERS AND 1 1/2" OR 1 1/4" FOR 2" COPPERSETTERS
9. CONC BLOCK SUPPORTS 4"x 4"x 12"
10. 1"x 18" PIPE
11. 90° ELL
12. SIGNAL WIRE TO ITRON ERT
13. FLOOR DRAIN

DENVER WATER
1600 West 12th Avenue • Denver, Colorado 80204
Phone(303)628-6000 • Telecopier No.(303)628-6851

INSIDE SETTING FOR 1 1/2" & 2" METER WITH CHECK VALVE & BYPASS

Scale: NONE	Date: NOVEMBER 1995
Drawn: RVM	Tr:	Ck:
Approved:	Dr. 127 No. 35

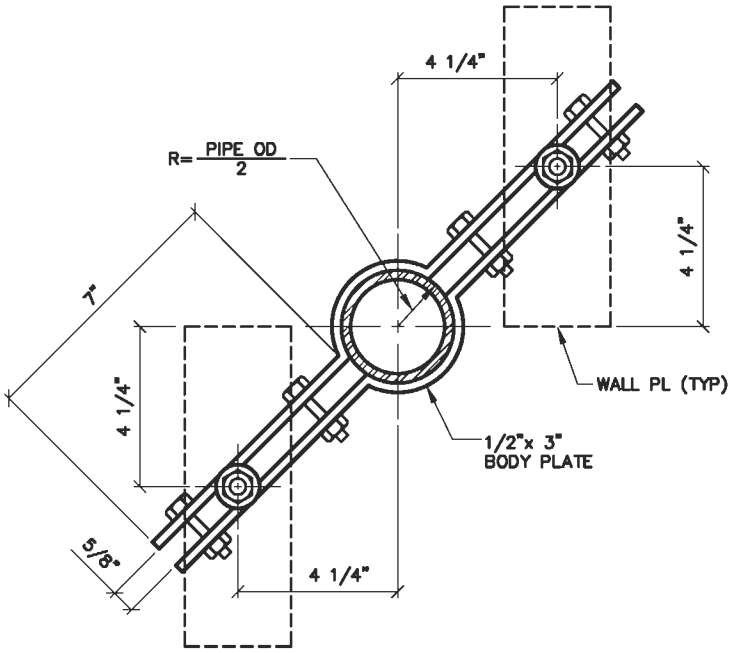

SECTION A–A

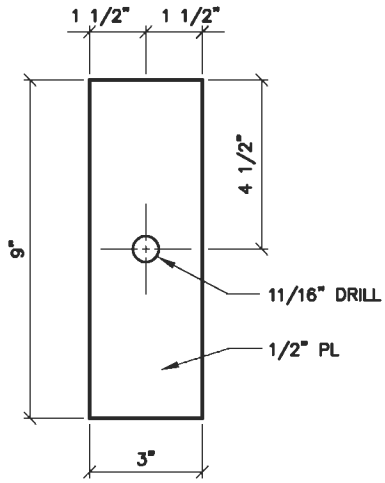

WALL PLATE
4 REQUIRED

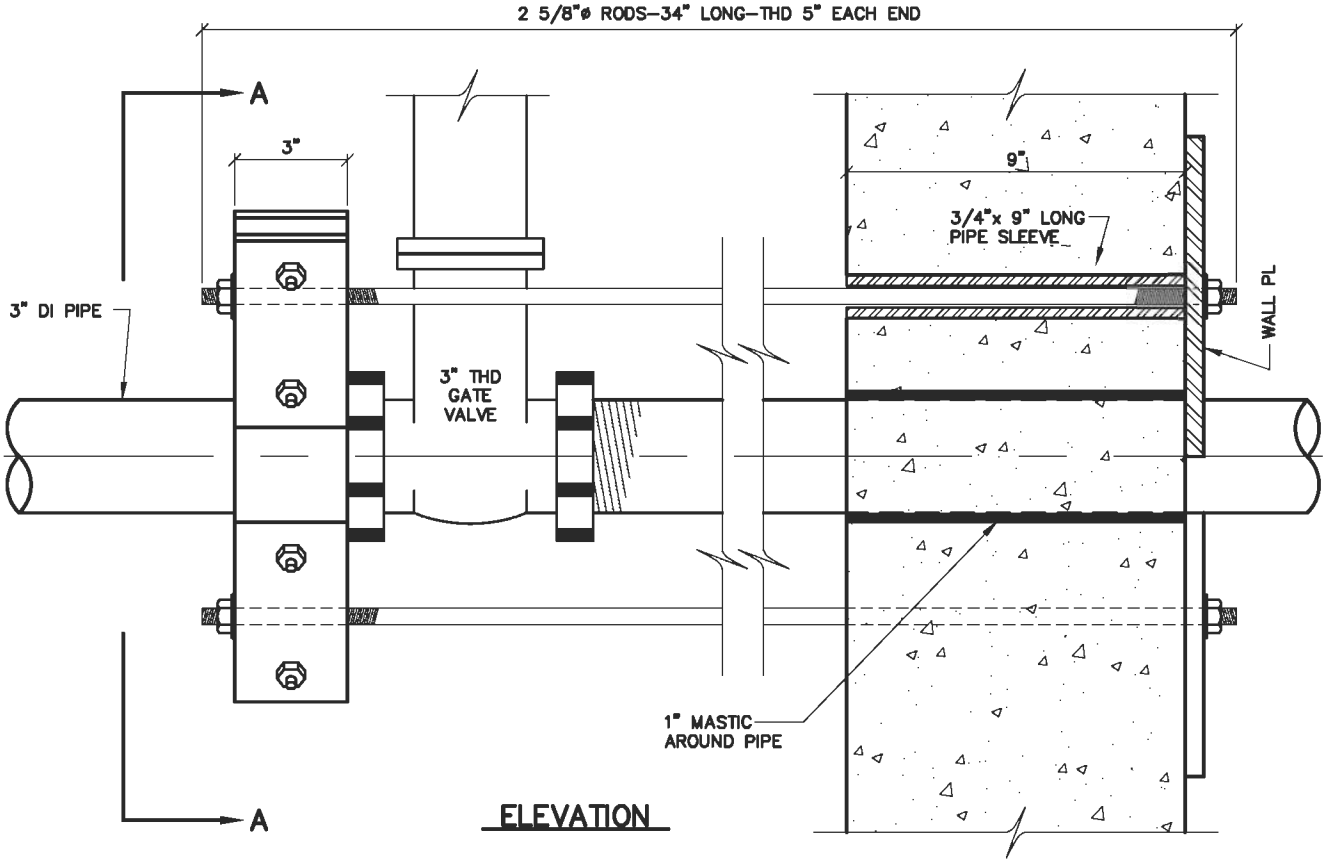

ELEVATION

DENVER WATER
1600 West 12th Avenue • Denver, Colorado 80204
Phone(303)628–6000 • Telecopier No.(303)628–6851

WALL PLATES AND BODY CLAMPS FOR 3" METERS

Scale: NONE	Date: AUGUST 1995	
Drawn: C.B.B.	Tr:	Ck:
Approved:	Dr. 127	No. 35

REVISED 2004

PIPE SIZE	RODS NO & SIZE	WALL PIPE SLEEVES	"A"	"B"
4"	2 – 5/8"ø	3/4" x 9"	3 1/2"	1 7/16"
6"	2 – 5/8"ø	3/4" x 9"	4 3/8"	1 13/16"
8"	2 – 3/4"ø	1" x 9"	5 7/16"	2 1/4"
10"	2 – 7/8"ø	1 1/2" x 9"	5 7/8"	3 3/8"

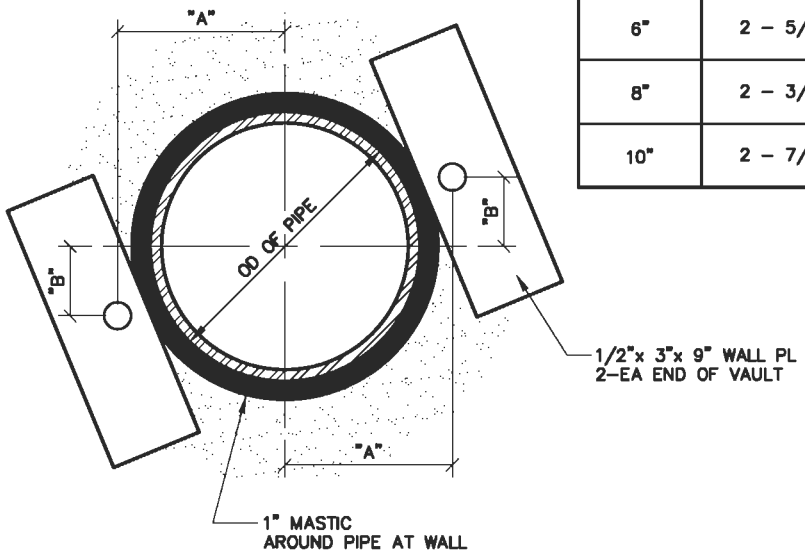

EXTERIOR ELEVATION

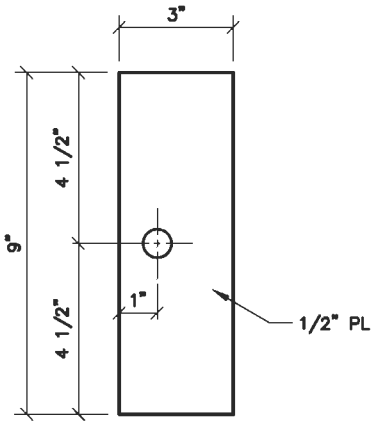

WALL PLATE

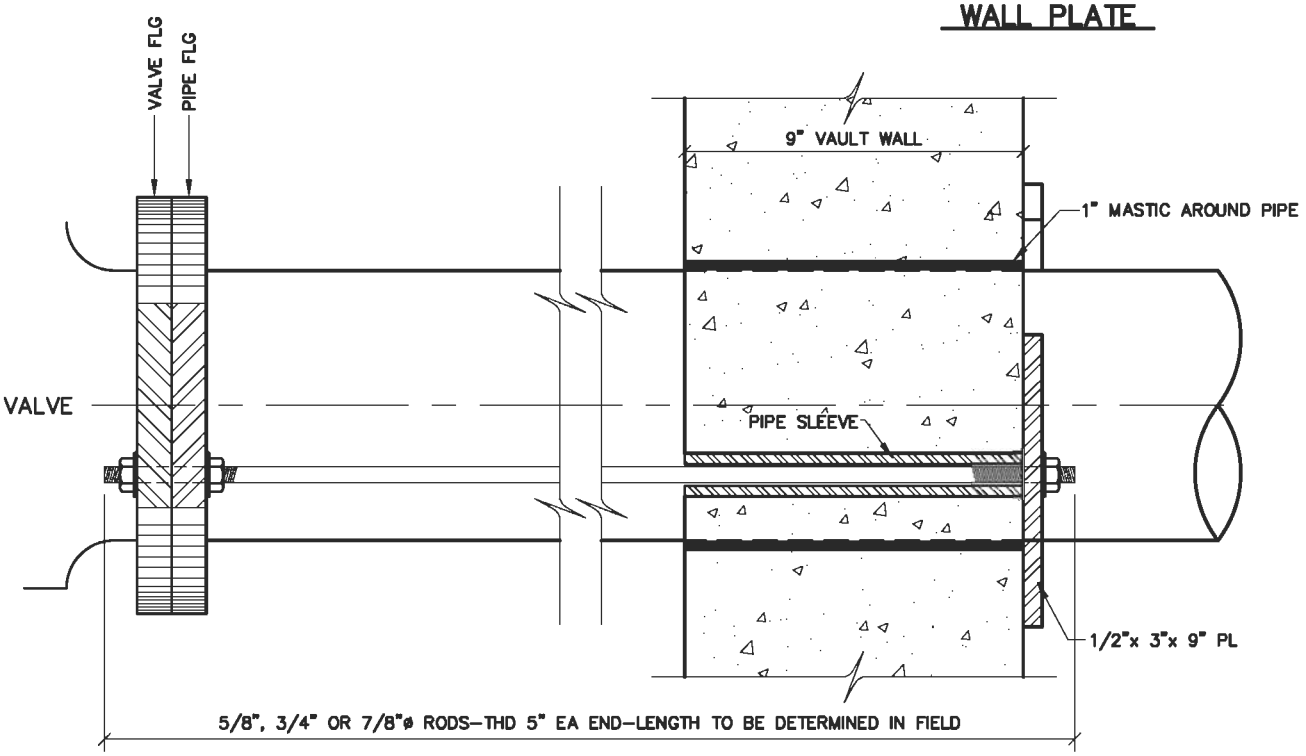

ELEVATION

DENVER WATER
1600 West 12th Avenue·Denver, Colorado 80204
Phone(303)628-6000·Telecopier No.(303)628-6851

WALL PLATES FOR 4", 6", 8" AND 10" METERS

Scale: NONE | Date: AUGUST 1995

Drawn: C.B.B. | Tr: | Ck:

Approved: | Dr. 127 No. 35

REVISED 2004

NOTES:

1. PIPING FOR 3" AND LARGER METERS SHALL BE DI.
2. INSTALLATION MUST ALLOW FOR FULL ACCESS TO METER AND VALVES, AND PROVIDE PROTECTION FROM FREEZING, WITH MIN 2 FT CLEARANCE TO WALL.
3. MIN DISTANCE FROM METER TO BYPASS LINE IS 2'-6"
4. A FLOOR DRAIN WITHIN 10 FT OF THE METER INSTALLATION IS REQD.
5. ALL VALVES TO BE NON-RISING STEM, RH OPEN.
6. A CHECK VALVE IS REQD IN ALL INSTALLATIONS UNLESS A BACKFLOW PREVENTION DEVICE IS INSTALLED.
7. ALL METERS MUST BE FURNISHED WITH ELECTRONIC DIGITAL ENCODER REGISTERS OR MECHANICALLY ENCODED REGISTERS, AND WITH AN ITRON REMOTE ERT FOR EACH REGISTER.
8. ERTS WILL BE INSTALLED AT A LOCATION DETERMINED BY DENVER WATER AT TIME OF METER INSPECTION. IN MOST CASES, ERTS WILL BE INSTALLED ON THE OUTSIDE OF THE BUILDING FACING A PUBLIC STREET. IF ERTS ARE MORE THAN 20 FT FROM METER LOCATION, OWNER MUST PROVIDE CONDUIT AND SIGNAL WIRE FROM METER TO ERT LOCATION. (SEE SHEET 53 FOR DETAIL OF CONDUIT AND OUTSIDE ERT MOUNTING).
9. INSIDE METER SETTINGS ARE PERMITTED ONLY WHEN THE TOTAL LENGTH OF SERVICE PIPE FROM MAIN TO METER SETTING DOES NOT EXCEED 60 FT.
10. ALL FITTINGS ARE TO BE FLANGED.

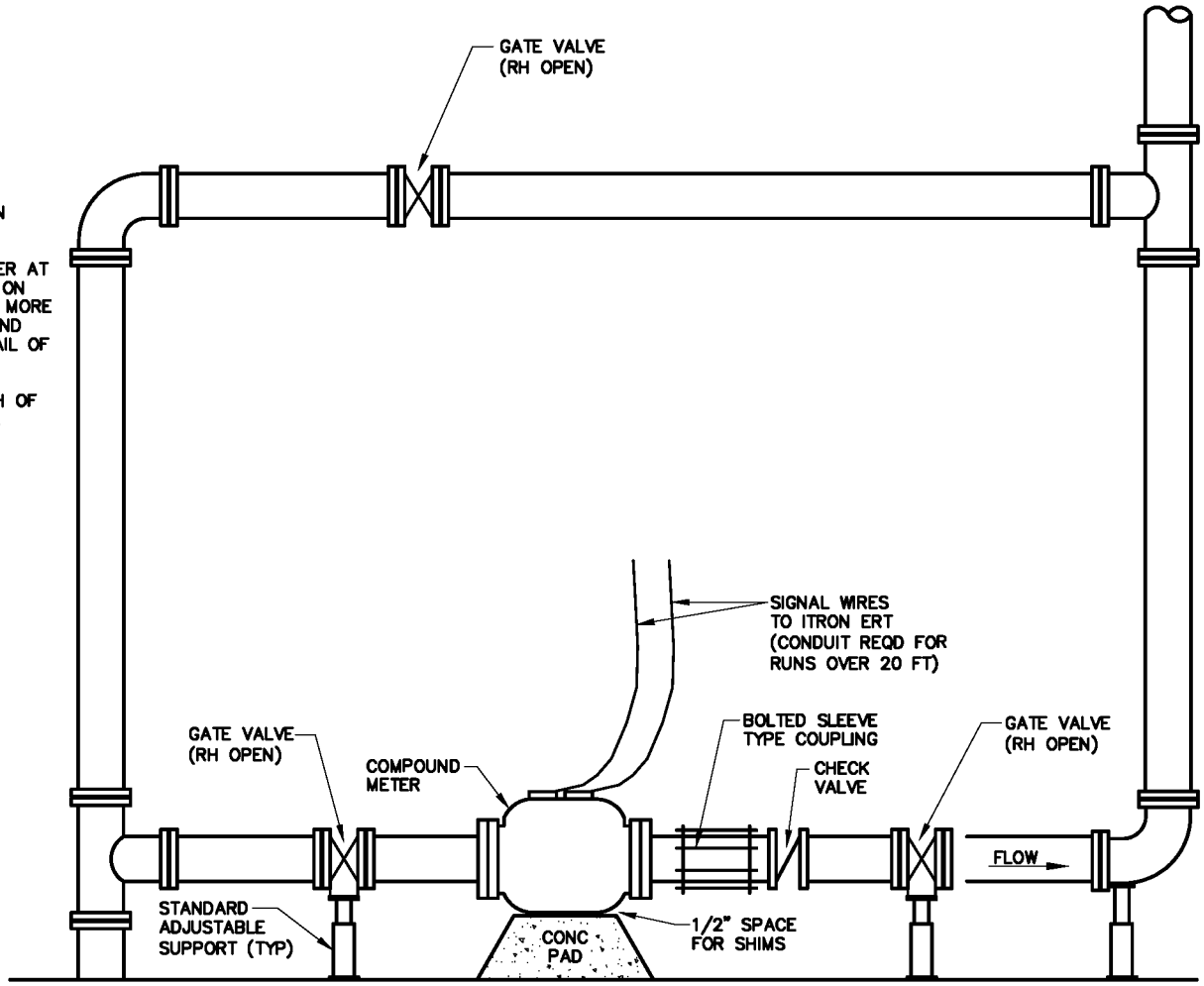

DENVER WATER
1600 West 12th Avenue • Denver, Colorado 80204
Phone(303)628-6000 • Telecopier No.(303)628-6851

INSIDE SETTING FOR 3" AND LARGER COMPOUND METER

Scale: NONE | Date: DECEMBER 1998

Drawn: C.B.B. | Tr: | Ck:

Approved: | Dr. 127 | No. 35

REVISED 2004

* CHECK VALVES ARE NOT REQUIRED WHERE A BACKFLOW PREVENTION DEVICE IS INSTALLED.

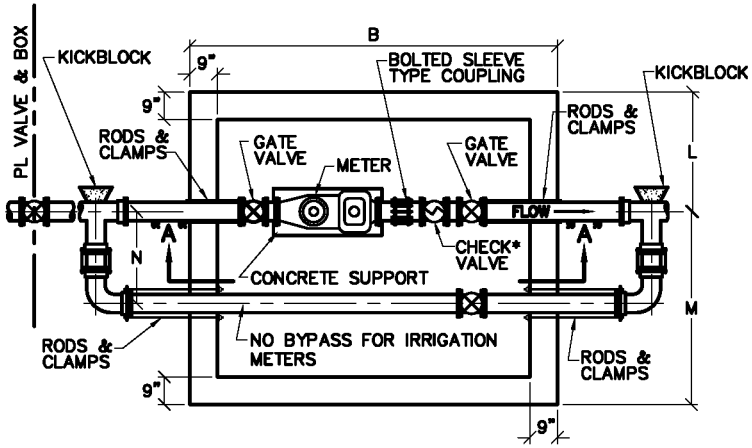

PLAN OF PIPING

NOTE:
1" MASTIC TYP @ ALL RODS THRU WALLS.

LL= TOP OR BOTTOM MM= BOTTOM ONLY

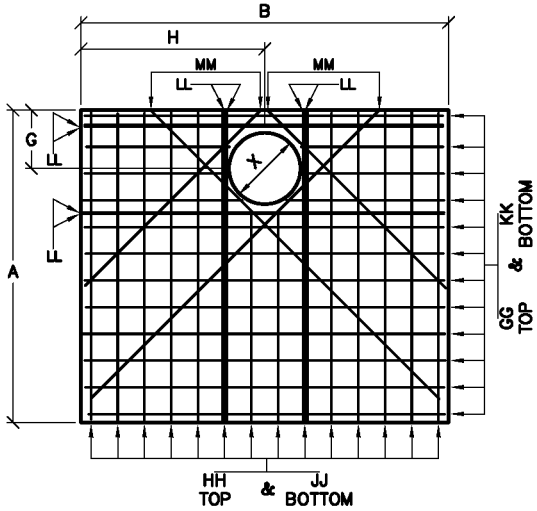

ROOF SLAB

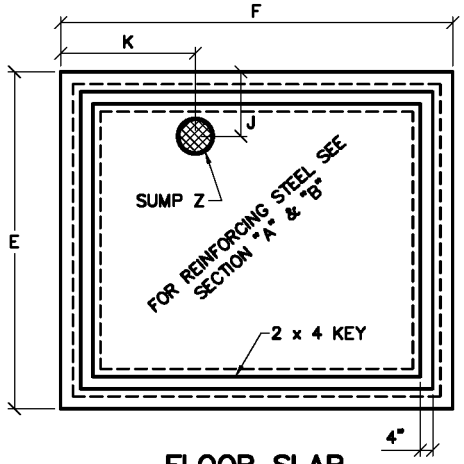

FLOOR SLAB

NOTE:
THE ROOF SLAB MAT BE CAST IN SECTIONS FOR FUTURE ACCESS. THE INDIVIDUAL SECTION WEIGHT MUST NOT EXCEED 7,500 POUNDS ACCORDING TO MS-26.

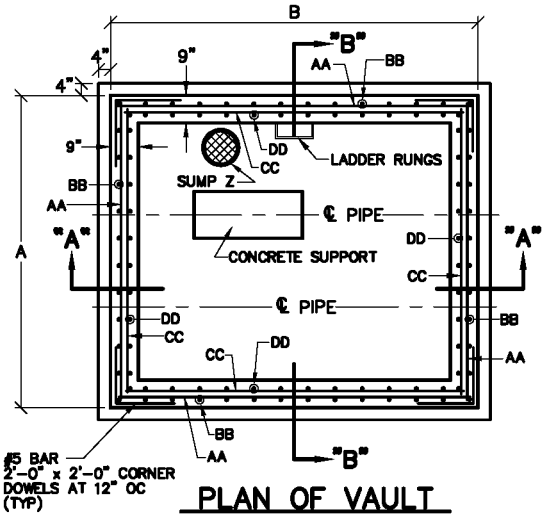

PLAN OF VAULT

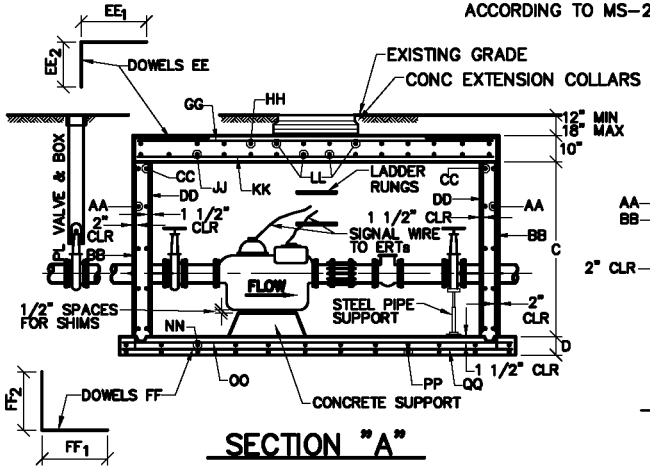

SECTION "A"

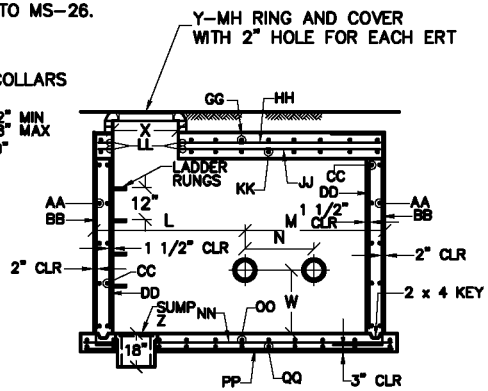

NOTE: PIPE ENCASED WITH MASTIC

SECTION "B"

SEE SHEET NO. 57 FOR DIMENSIONS CORRESPONDING TO THIS DRAWING.

NOTE:
EACH METER REQUIRES AN ELECTRONIC DIGITAL ENCODER OR MECHANICALLY ENCODED REGISTER WITH AN ITRON ERT EXCEPT FOR MASTER METER DISTRIBUTORS DENVER WATER WILL DETERMINE TYPE OF ERT AND LOCATION PRIOR TO VAULT INSTALLATION.

NOTE:
THE DISTANCE BETWEEN RUNGS, CLEATS AND STEPS SHALL NOT EXCEED 12 INCHES AND SHALL UNIFORM THROUGHOUT THE LENGTH OF THE LADDER.

DENVER WATER
1600 West 12th Avenue • Denver, Colorado 80204
Phone(303)628-6000 • Telecopier No.(303)628-6851

COMPOUND METER WITH BOTH CHECK VALVE AND BYPASS

Scale: NONE
Date: AUGUST 1995
Drawn: C.B.B.
Tr:
Ck:
Approved:
Dr. 127 No. 35

NOTE: PRECAST VAULT CAN BE USED FOR ALL 3" AND 4" COMPOUND METERS.

METER SIZE	WALLS								WALL DOWELS					
	AA		BB		CC		DD		EE & FF		EE_1	EE_2	FF_1	FF_2
	BAR	Dist	BAR	Dist	BAR	Dist	BAR	Dist	BAR	Dist				
3"	No 4	1'-4"	No 4	1'-0"					No 5	1'-0"	2'-6"	2'-0"	3'-0"	2'-0"
4"	No 4	1'-4"	No 4	1'-0"					No 5	1'-0"	2'-6"	2'-0"	3'-0"	2'-0"
6"	No 4	1'-4"	No 4	1'-0"					No 5	1'-0"	2'-6"	2'-0"	3'-0"	2'-0"
8"	No 4	1'-4"	No 4	1'-0"	No 4	1'-4"	No 5	1'-0"	No 5	1'-0"	3'-0"	2'-6"	3'-0"	2'-6"
10"	No 4	1'-4"	No 4	1'-0"	No 4	1'-4"	No 5	1'-0"	No 5	1'-0"	3'-0"	2'-6"	3'-0"	2'-6"

METER SIZE	ROOF SLAB											FLOOR SLAB							
	GG		HH		JJ		KK		LL		MM	NN		OO		PP		QQ	
	BAR	Dist	BAR	Dist	BAR	Dist	BAR	Dist	TOP	Bot	Bot	BAR	Dist	BAR	Dist	BAR	Dist	BAR	Dist
3"					No 7	1'-0"	No 7	1'-0"		No 7	No 7	No 5	1'-0"	No 5	1'-0"				
4"					No 7	1'-0"	No 7	1'-0"		No 7	No 7	No 5	1'-0"	No 5	1'-0"				
6"					No 7	1'-0"	No 7	1'-0"		No 7	No 7	No 5	1'-0"	No 5	1'-0"				
8"	No 5	1'-0"	No 5	1'-0"	No 7	1'-0"	No 8	9"	No 5	No 7	No 7	No 5	1'-0"	No 5	1'-0"	No 5	1'-0"	No 5	1'-0"
10"	No 5	1'-0"	No 5	1'-0"	No 7	1'-0"	No 8	9"	No 5	No 7	No 7	No 5	1'-0"	No 5	1'-0"	No 5	1'-0"	No 5	1'-0"

SEE SHEET 60 FOR DRAWINGS CORRESPONDING TO THESE DIMENSIONS

METER SIZE	PIPE SIZE ø	VAULT DIMENSIONS															MANHOLE		SUMP
		A	B	C*	D	E	F	G	H	J	K	L	M	N		W	X	Y	Z
3"	3"	8'-6"	10'-0"	6'-0"	8"	9'-2"	10'-8"	2'-3"	4'-8"	1'-9"	2'-8"	3'-3"	5'-3"	2'-6"		2'-0"	3'-0"	24"x 36"	1'-0"
4"	4"	8'-6"	10'-0"	6'-0"	8"	9'-2"	10'-8"	2'-3"	5'-4"	1'-9"	3'-4"	3'-3"	5'-3"	2'-6"		2'-6"	3'-0"	24"x 36"	1'-0"
6"	6"	8'-6"	11'-0"	6'-0"	8"	9'-2"	11'-8"	2'-3"	5'-8"	1'-9"	3'-8"	3'-3"	5'-3"	2'-6"		2'-6"	3'-0"	24"x 36"	1'-0"
8"	8"	8'-6"	14'-0"	6'-0"	10"	9'-2"	14'-8"	2'-3"	5'-3"	2'-3"	3'-0"	3'-3"	5'-3"	2'-6"		2'-6"	3'-0"	24"x 36"	1'-6"
10"	10"	8'-6"	14'-0"	6'-0"	10"	9'-2"	14'-8"	2'-3"	4'-11"	2'-3"	3'-0"	3'-3"	5'-3"	2'-6"		2'-6"	3'-0"	24"x 36"	1'-6"

*NOTE: DIMENSION C IS A MINIMUM SUGGESTED HEIGHT.

NOTE:
3" SEE SHEET 57 FOR WALL PLATES AND BODY CLAMPS.
4" SEE SHEET 58 FOR WALL PLATES.
6" USE 5/16"x 7" MIDDLE RING ON BOLTED SLEEVE TYPE COUPLINGS.
8" USE 3/8"x 7" MIDDLE RING ON BOLTED SLEEVE TYPE COUPLINGS.
10" USE 3/8"x 7" MIDDLE RING ON BOLTED SLEEVE TYPE COUPLINGS.

DENVER WATER
1600 West 12th Avenue • Denver, Colorado 80204
Phone(303)628-6000 • Telecopier No.(303)628-6851

COMPOUND METER DIMENSIONS

Scale: NONE Date: JULY 1995
Drawn: C.B.B. Tr: Ck:
Approved: Dr. 127 No. 35

*CHECK VALVES ARE NOT REQUIRED WHERE A BACKFLOW PREVENTION DEVICE IS INSTALLED

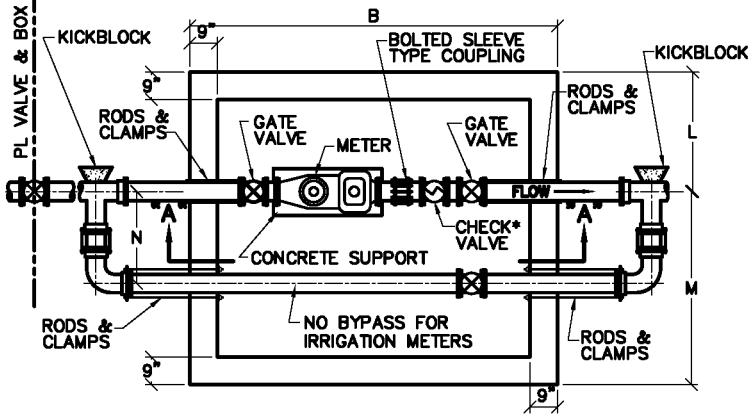

PLAN OF PIPING

NOTE:
1" MASTIC @ ALL RODS THRU WALLS.

LL= TOP OR BOTTOM MM= BOTTOM ONLY

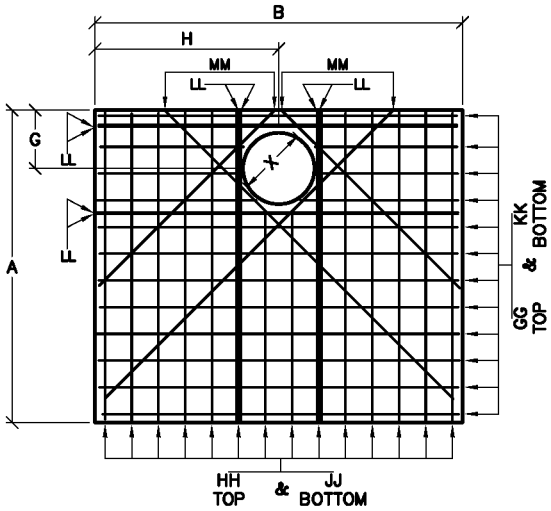

ROOF SLAB

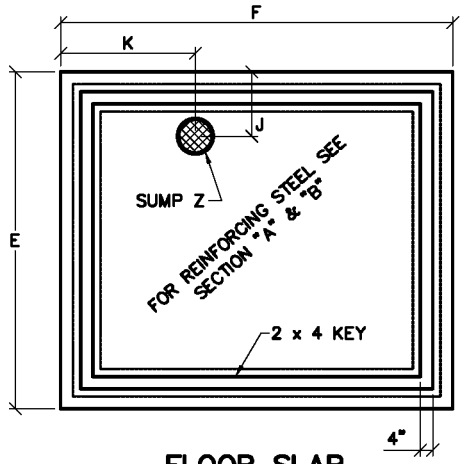

FLOOR SLAB

NOTE:
THE ROOF SLAB MAY BE CAST IN SECTIONS AS LONG AS THE INDIVIDUAL SECTION WEIGHT DOES NOT EXCEED 7,500 POUNDS ACCORDING TO MS-26.

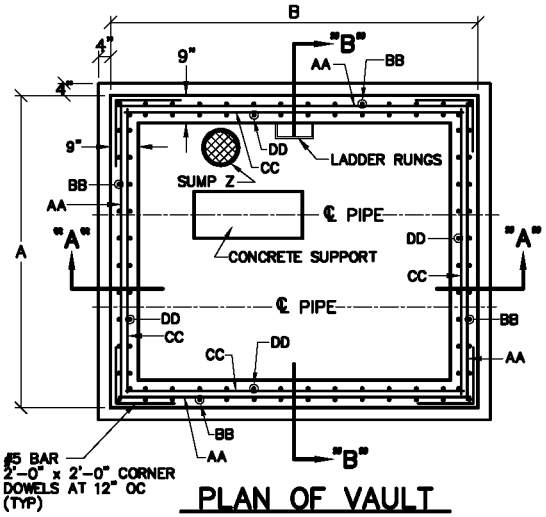

PLAN OF VAULT

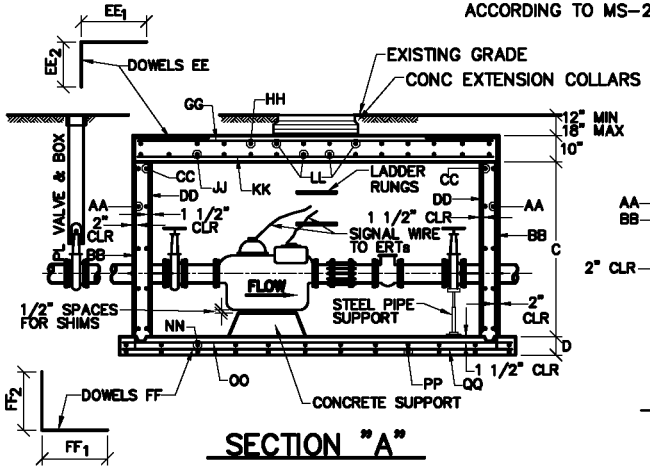

SECTION "A"

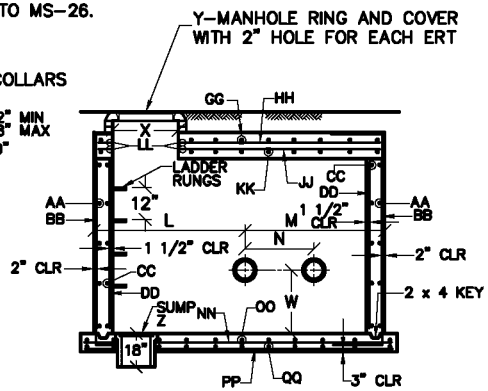

NOTE: PIPE ENCASED WITH MASTIC

SECTION "B"

SEE SHEET NO. 59 FOR DIMENSIONS CORRESPONDING TO THIS DRAWING.

NOTE:
EACH METER REQUIRES AN ELECTRONIC DIGITAL ENCODER OR MECHANICALLY ENCODED REGISTER WITH AN ITRON ERT FOR EACH REGISTER EXCEPT FOR MASTER METER DISTRIBUTORS. DENVER WATER WILL DETERMINE TYPE OF ERT AND LOCATION PRIOR TO VAULT INSTALLATION.

NOTE:
THE DISTANCE BETWEEN RUNGS, CLEATS AND STEPS SHALL NOT EXCEED 12 INCHES AND SHALL BE UNIFORM THROUGHOUT THE LENGTH OF THE LADDER.

DENVER WATER
1600 West 12th Avenue • Denver, Colorado 80204
Phone(303)628-6000 • Telecopier No.(303)628-6851

COMPACT FIRELINE METER WITH BYPASS

Scale: NONE
Date: AUGUST 1995
Drawn: C.B.B.
Tr:
Ck:
Approved:
Dr. 127 No. 35

REVISED 2004

METER SIZE	WALLS								WALL DOWELS						ROOF SLAB											FLOOR SLAB							
	AA		BB		CC		DD		EE & FF		EE_1	EE_2	FF_1	FF_2	GG		HH		JJ		KK		LL		MM	NN		OO		PP		QQ	
	BAR	Dist	BAR	Dist	BAR	Dist	BAR	Dist	BAR	Dist					BAR	Dist	BAR	Dist	BAR	Dist	BAR	Dist	TOP	Bot	Bot	BAR	Dist	BAR	Dist	BAR	Dist	BAR	Dist
6"	No 4	1'-4"	No 5	1'-0"	No 4	1'-4"	No 5	1'-0"	No 5	1'-0"	3'-0"	2'-6"	3'-0"	2'-6"	No 5	1'-0"	No 5	1'-0"	No 7	1'-0"	No 8	1'-0"	No 5	No 7	No 7	No 5	1'-0"	No 5	1'-0"	No 5	1'-0"	No 5	1'-0"
8"	No 4	1'-4"	No 5	1'-0"	No 4	1'-4"	No 5	1'-0"	No 5	1'-0"	3'-0"	2'-6"	3'-0"	2'-0"	No 5	1'-0"	No 5	1'-0"	No 7	1'-0"	No 8	1'-0"	No 5	No 7	No 7	No 5	1'-0"	No 5	1'-0"	No 5	1'-0"	No 5	1'-0"
10"	No 4	1'-4"	No 5	1'-0"	No 4	1'-4"	No 5	1'-0"	No 5	1'-0"	4'-0"	2'-6"	2'-6"	2'-6"	No 5	1'-0"	No 5	1'-0"	No 7	9"	No 8	9"	No 5	No 7	No 7	No 5	1'-0"	No 5	1'-0"	No 5	1'-0"	No 5	1'-0"

F.M.C.T. METER With bypass (Cont.)

SEE SHEET 62 FOR DRAWINGS CORRESPONDING TO THESE DIMENSIONS.

METER SIZE	PIPE SIZE ø	VAULT DIMENSIONS										PIPING DIMENSIONS												MANHOLE		SUMP
		A	B	C*	D	E	F	G	H	J	K	L	M	N	O	P	Q	R	S	T	U	V	W	X	Y	Z
6"	6"	10'-6"	12'-0"	6'-0"	10"	11'-2"	12'-8"	2'-3"	5'-0"	2'-3"	2'-9"	4'-9"	5'-9"	3'-0"	3'-9"	3'-0"	–					1'-9⅝"	2'-6"	3'-0"	24"x 36"	1'-6"
8"	8"	10'-6"	12'-0"	6'-0"	10"	11'-2"	12'-8"	2'-3"	5'-0"	2'-3"	2'-9"	4'-9"	5'-9"	3'-0"	4'-5"	3'-8"	–					2'-2½"	2'-6"	3'-0"	24"x 36"	1'-6"
10"	10"	12'-6"	13'-6"	6'-0"	10"	13'-2"	14'-2"	2'-3"	5'-9"	2'-3"	3'-6"	5'-9"	6'-9"	3'-6"	5'-8"	4'-8"	–					2'-9¾"	2'-6"	3'-0"	24"x 36"	1'-6"

*NOTE: DIMENSION C IS A MINIMUM SUGGESTED HEIGHT.

NOTES:

6" USE 5/16"x 7" MIDDLE RING ON BOLTED SLEEVE TYPE COUPLINGS.
8" USE 5/16"x 7" MIDDLE RING ON BOLTED SLEEVE TYPE COUPLINGS.
10" USE 3/8" x 7" MIDDLE RING ON BOLTED SLEEVE TYPE COUPLINGS.

DENVER WATER
1600 West 12th Avenue • Denver, Colorado 80204
Phone(303)628-6000 • Telecopier No.(303)628-6851

COMPACT FIRELINE
METER DIMENSIONS

Scale: NONE Date: AUGUST 1995
Drawn: C.B.B. Tr: Ck:
Approved: Dr. 127 No. 35

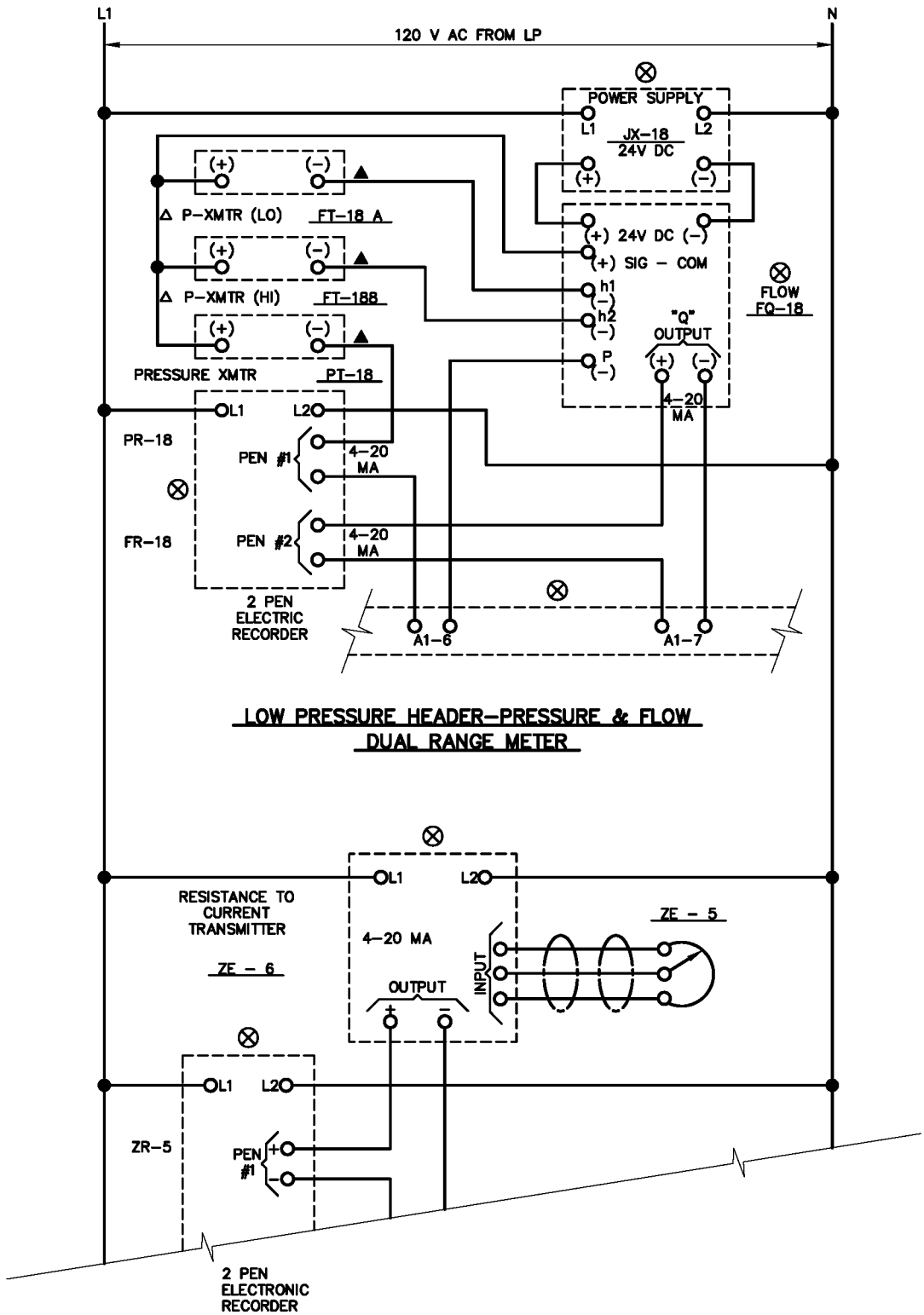

PUMP DISCHARGE VALVE
VALVE POSITION

DENVER WATER
1600 West 12th Avenue • Denver, Colorado 80204
Phone(303)628-6000 • Telecopier No.(303)628-6851

INSTRUMENTATION AND CONTROL LADDER DIAGRAM TYPICAL

Scale: NONE	Date: AUGUST 1995	
Drawn: C.B.B.	Tr:	Ck:
Approved:	Dr. 127	No. 35

ELECTRIC OPERATED 4-WAY VALVE SOLENOIDS

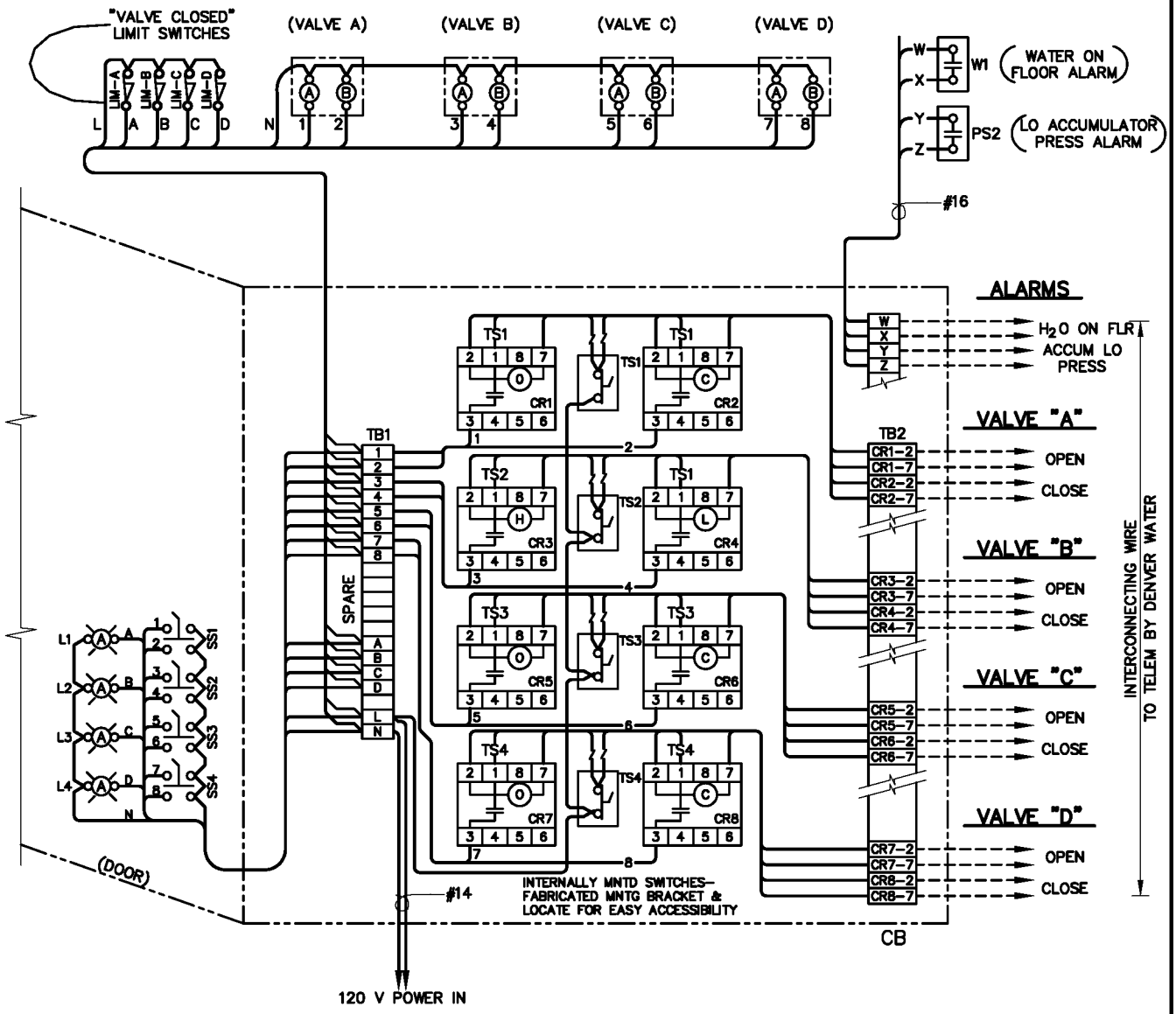

CONTROL BOX

NOTE:
CR1 THRU CR8 ARE CONTROL RELAYS.

DENVER WATER
1600 West 12th Avenue·Denver, Colorado 80204
Phone(303)628-6000·Telecopier No.(303)628-6851

INSTRUMENTATION AND CONTROL WIRING DIAGRAM TYPICAL

Scale: NONE	Date: AUGUST 1995
Drawn: C.B.B. Tr:	Ck:
Approved:	Dr. 127 No. 35

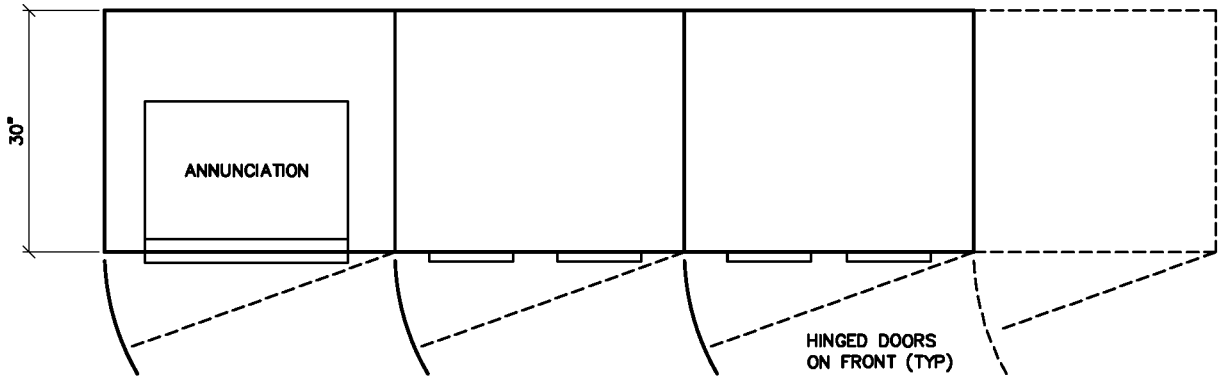

TOP VIEW

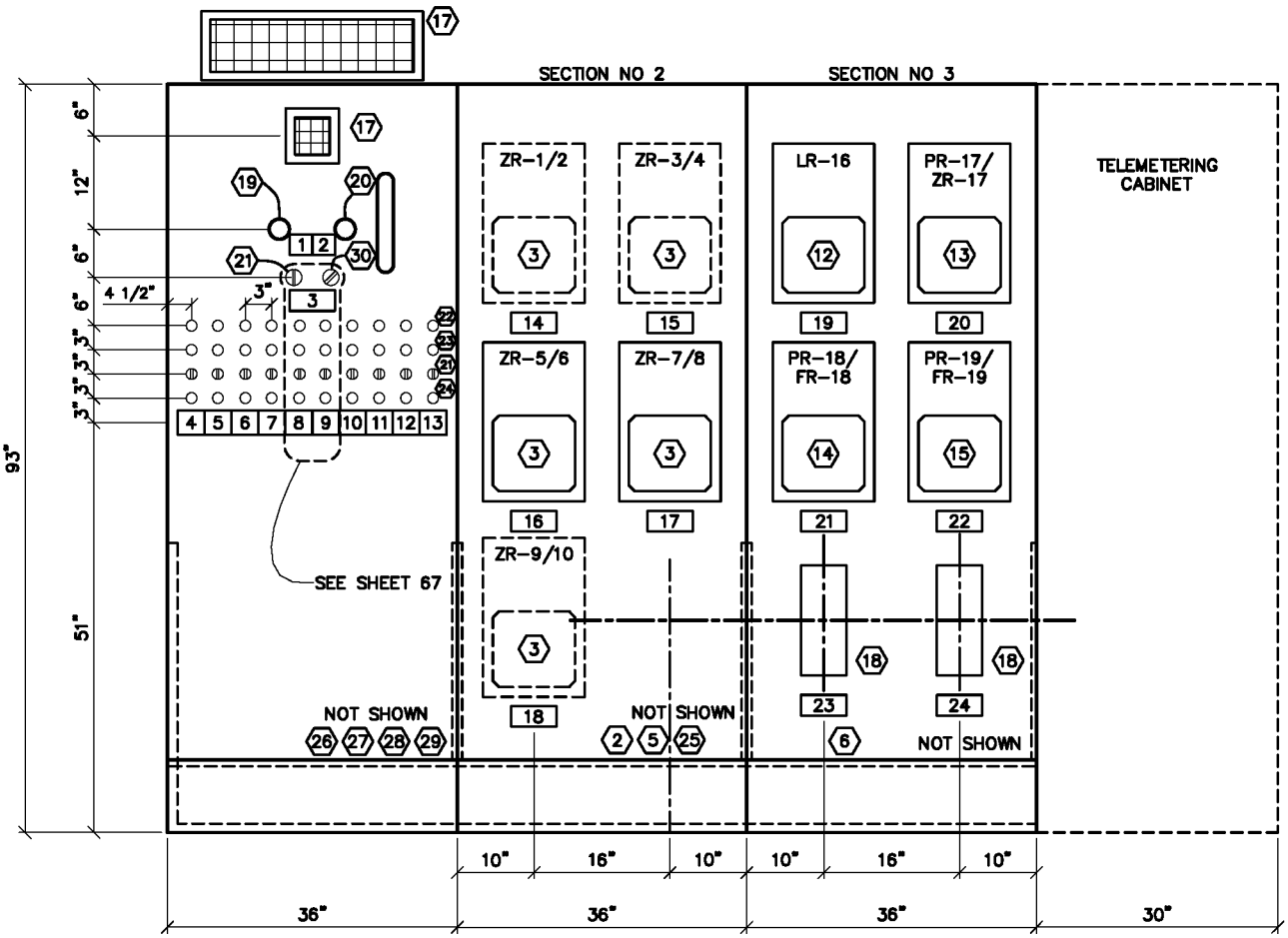

DENVER WATER
1600 West 12th Avenue · Denver, Colorado 80204
Phone(303)628-6000 · Telecopier No.(303)628-6851

INSTRUMENTATION AND CONTROL CABINET LAYOUT TYPICAL

Scale: NONE	Date: AUGUST 1995	
Drawn: C.B.B.	Tr:	Ck:
Approved:	Dr. 127	No. 35

REVISED 2004

SHEET 66

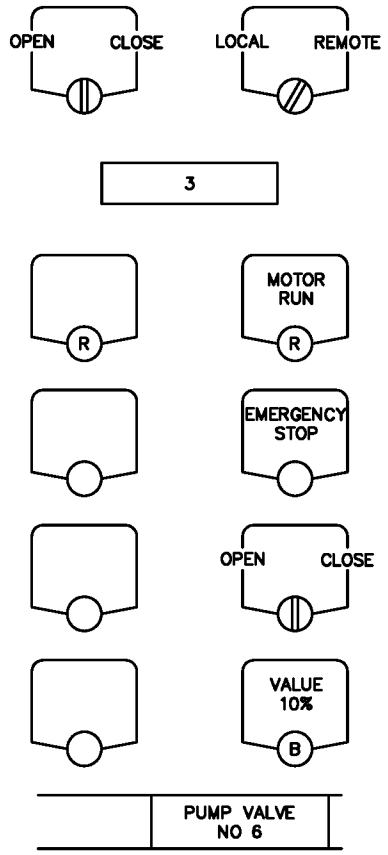

DETAIL NO 1

INSTRUMENT MATERIAL LIST

ITEM NO	INSTRUMENT NO	DESCRIPTION	MFR & CATALOG NO	QUAN
1	ZE-5, 6, 7 ▲ ZE-17 ▲	POTENTIOMETER	FURNISHED WITH THE VALVE	4
2	ZT-5, 6, 7 **ZT-17	RESISTANCE TO CURRENT TRANSMITTER-OHMS INPUT 4-20 MA OUTPUT 117 V 60 Hz	ACROMAG #819-8X-U	4 (7FUT)
3	ZR-5, 6, 7/8	2 PEN ELECTRONIC RECORDER 12" CIRCULAR CHART 0-100% LINEAR SCALE. 120 V60~1ø 4-20 MA INPUT	BRISTOL 4331-20A-060 -600-002-11N-200	2 (3FUT)
4	LS-5, 6, 7 ▲	LIMIT SWITCH, STD CONST CW & CCW ROTATION, 1 NO 1 NC CONTACT W/3" STANDARD LEVER OPERATOR	CUTLER HAMMER TYPE "L" #10316-H187-KL-17	3 (7FUT)
5	R-105, 106, 107 **	OPEN TYPE "RYC" RELAY WITH 220 V 60 Hz COIL & 4 NO CONTACTS	MICRO SWITCH #RYCA 40-B	3 (7FUT)
6 ***	JX-16, 17, 18	POWER SUPPLY, 25 WATT 12 VOLTS DC	BRISTOL 2007-40B	4
7	LT-16 ▲	PRESSURE TRANSMITTER INPUT RANGE 0-120 H_2O TO 0-720 H_2O, 316 SS ELEMENT 4-20 MA OUTPUT	BRISTOL #2408-10A-411-110-110	1
8	PT-17 ▲ 18, 19 ***	PRESSURE TRANSMITTER INPUT RANGE 0-150 TO 0-900	BRISTOL #2408-10A-611-110-110	3
9	FT-18A	DIFFERENTIAL PRESSURE TRANSMITTER SET 10.8" H_2O ΔP	BRISTOL #2408-30A-211-111-101-000	1

NAMEPLATE SCHEDULE

ITEM NO	DESCRIPTION
1	SILENCE
2	RESERVOIR FILL VALVE
3	SILENCE
4	PUMP/VALVE NO 1
5	NO 2
6	NO 3
7	NO 4
8	NO 5
9	NO 6
10	NO 7
11	NO 8
12	NO 9
13	NO 10
14	VALVE NO 1 POSITION NO 2
15	NO 3 NO 4
16	NO 5 NO 6
17	NO 7 NO 8
18	NO 9 NO 10
19	RESERVOIR LEVEL

DENVER WATER
1600 West 12th Avenue·Denver, Colorado 80204
Phone(303)628-6000·Telecopier No.(303)628-6851

INSTRUMENTATION AND CONTROL DETAIL AND SCHEDULES TYPICAL

Scale: NONE | Date: AUGUST 1995

Drawn: C.B.B. | Tr: | Ck:

Approved: | Dr. 127 No. 35

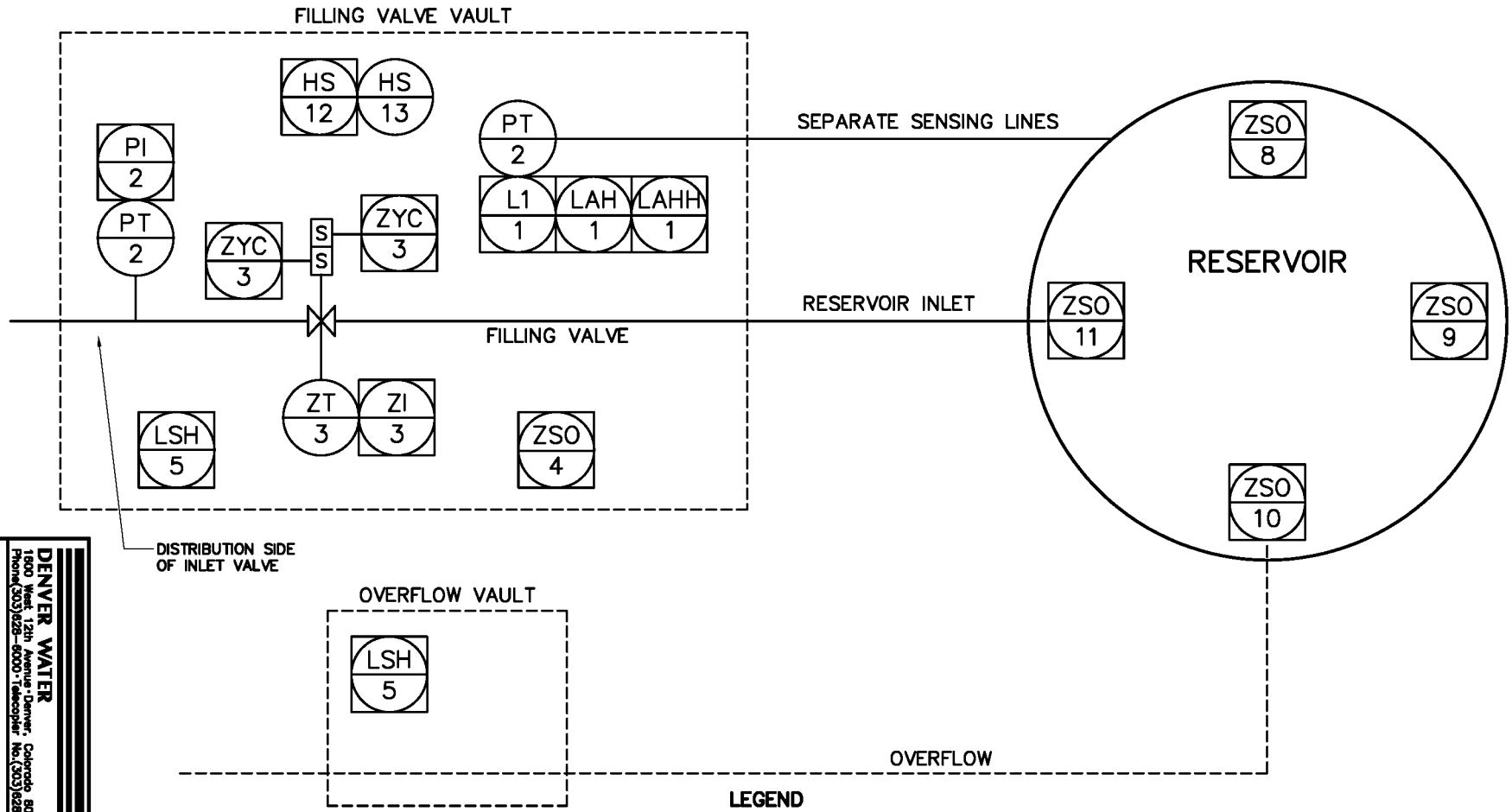

LEGEND

PT-1	RESERVOIR PRESSURE TRANSMITTER
LI-1	RESERVOIR LEVEL TRANSMITTER
LAH-1	RESERVOIR LEVEL-HIGH LEVEL ALARM
LAHH-1	RESERVOIR LEVEL-HIGH HIGH LEVEL ALARM
PT-2	FILLING VALVE WATER PRESSURE TRANSMITTER
PI-2	FILLING VALVE WATER PRESSURE INDICATOR
ZT-3	FILLING VALVE VAULT POSITION TRANSMITTER
ZI-3	FILLING VALVE VAULT POSITION INDICATOR
ZYC-3	CLOSED VALVE SOLENOID
ZYO-3	OPEN VALVE SOLENOID
ZSO-4	ZSO-4 FILLING VALVE VAULT HATCH OPEN ALARM
LSH-5	FILLING VALVE VAULT WATER ON FLOOR ALARM
LSH-6	OVERFLOW HIGH LEVEL ALARM
ZSO-8	RESERVOIR HATCH OPEN ALARM
ZSO-9	RESERVOIR HATCH OPEN ALARM
ZSO-10	RESERVOIR HATCH OPEN ALARM
ZSO-11	RESERVOIR HATCH OPEN ALARM
HS-12	LOCAL/REMOTE SELECTOR SWITCH
HS-13	OPEN/CLOSE SELECTOR SWITCH

DENVER WATER
1600 West 12th Avenue • Denver, Colorado 80254
Phone(303)628-6000 • Telecopier No.(303)628-6851

INSTRUMENTATION AND CONTROL
P & ID TYPICAL

Scale: NONE
Date: AUGUST 1995
Drawn: C.B.B.
Tr:
Ck:
Approved:
Dr. 127 No. 35

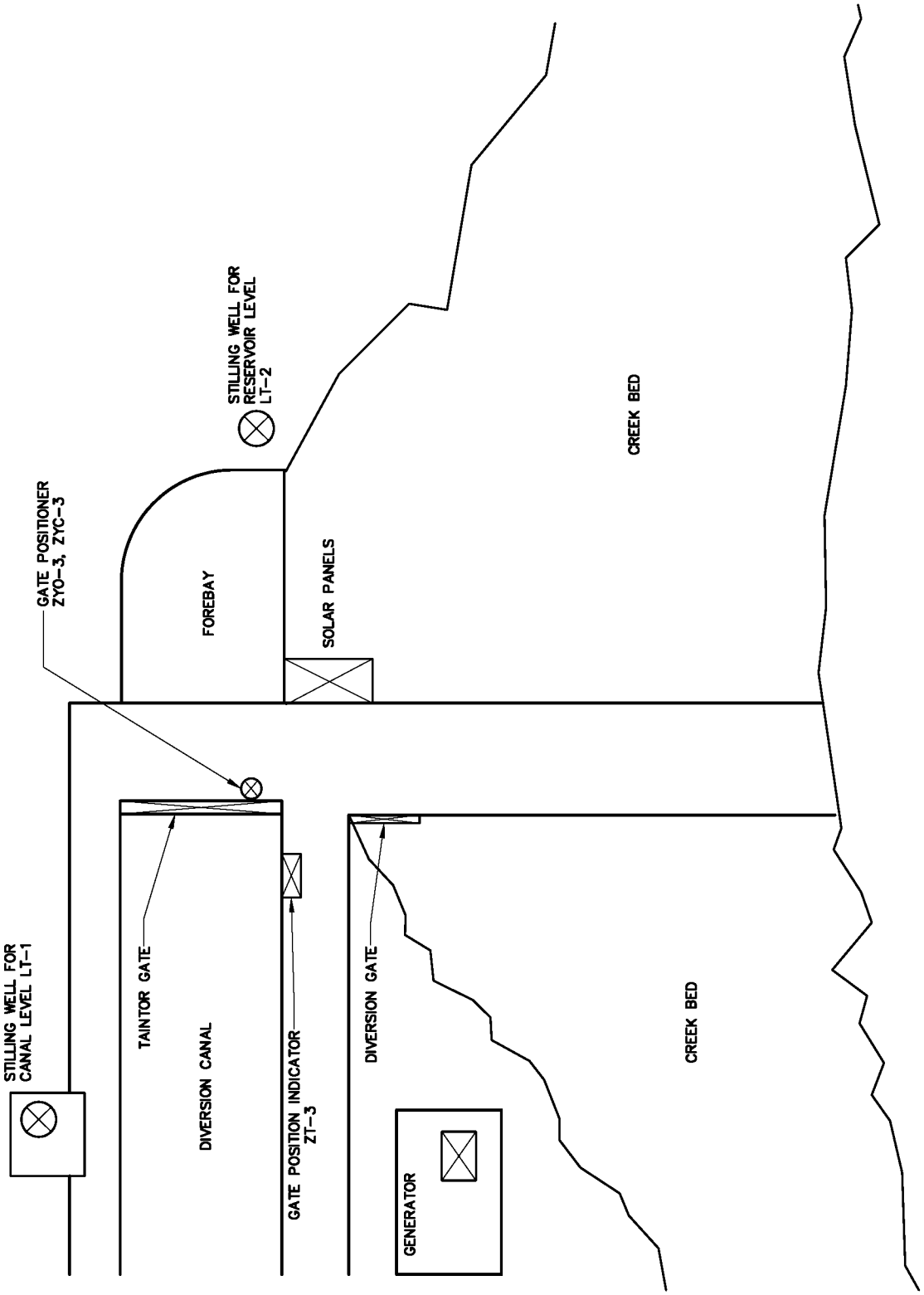

DENVER WATER
1600 West 12th Avenue • Denver, Colorado 80204
Phone(303)628-6000 • Telecopier No.(303)628-6851

INSTRUMENTATION AND CONTROL SITE DIAGRAM TYPICAL

Scale: NONE	Date: AUGUST 1995	
Drawn: C.B.B.	Tr:	Ck:
Approved:	Dr. 127	No. 35

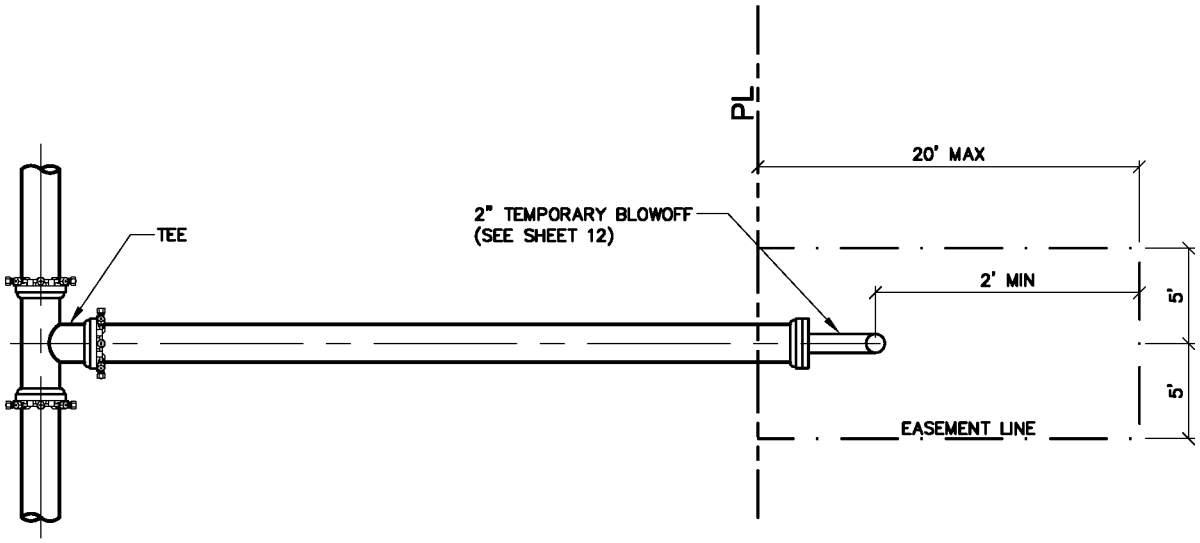

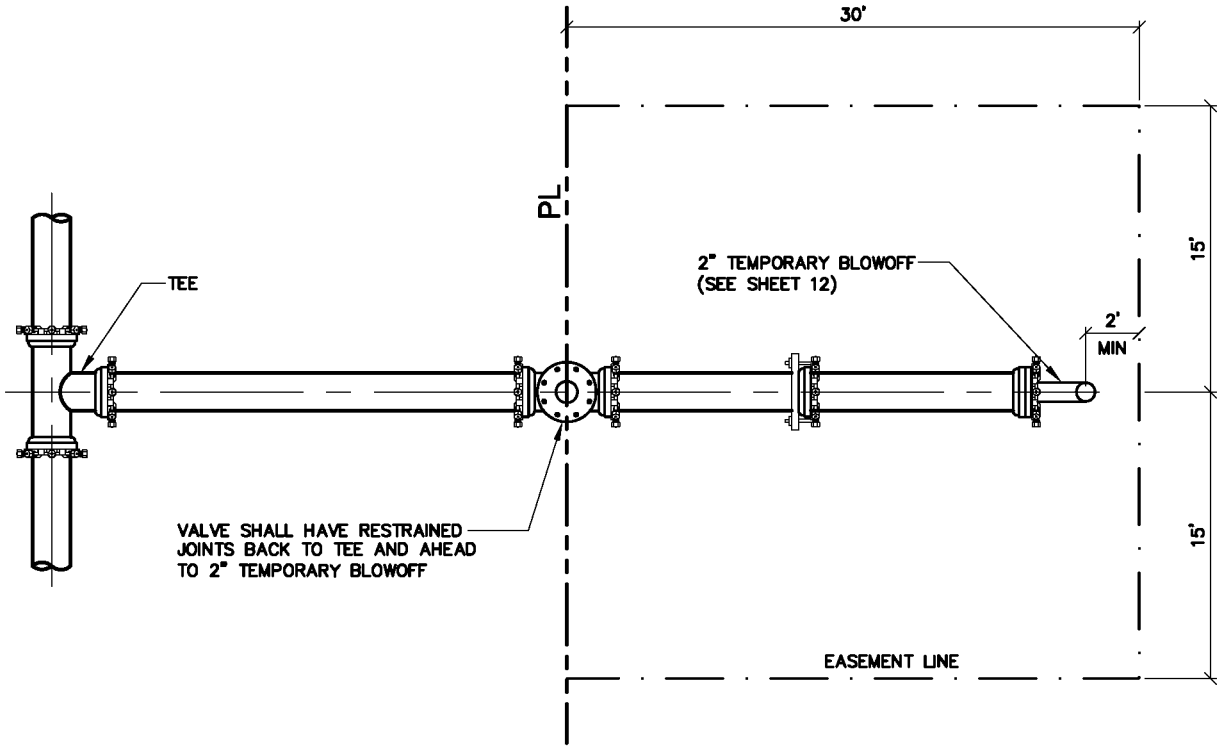

DENVER WATER
1600 West 12th Avenue • Denver, Colorado 80204
Phone(303)628-6000 • Telecopier No.(303)628-6851

STUB-OUT CONFIGURATIONS FOR FUTURE MAIN EXTENSIONS

Scale: NONE	Date: JUNE 1995	
Drawn: C.B.B.	Tr:	Ck:
Approved:	Dr. 127	No. 35

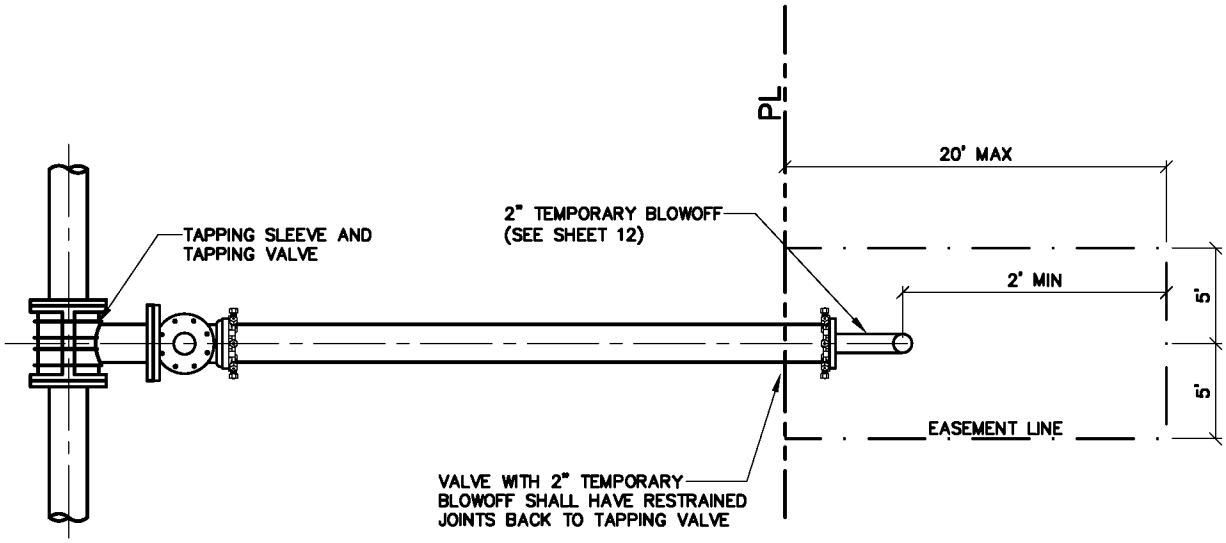

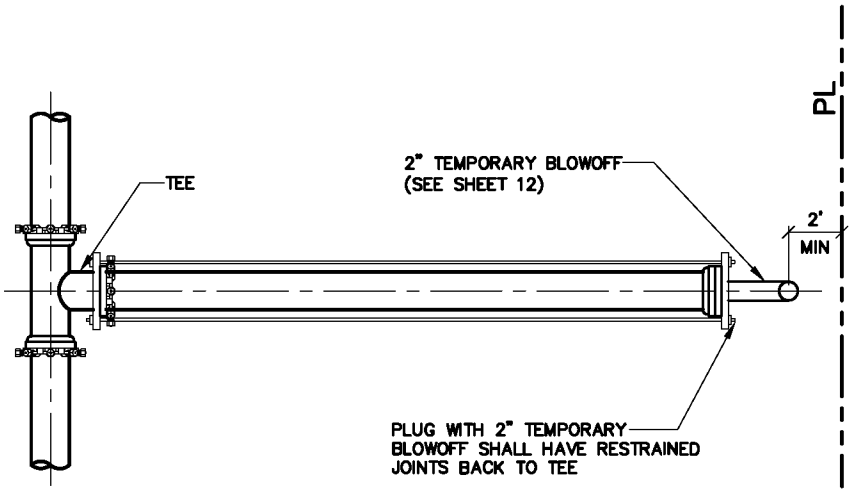

DENVER WATER
1600 West 12th Avenue • Denver, Colorado 80204
Phone(303)628-6000 • Telecopier No.(303)628-6851

STUB-OUT CONFIGURATIONS FOR FUTURE MAIN EXTENSIONS

Scale: NONE	Date: AUGUST 1995	
Drawn: C.B.B.	Tr:	Ck:
Approved:	Dr. 127	No. 35

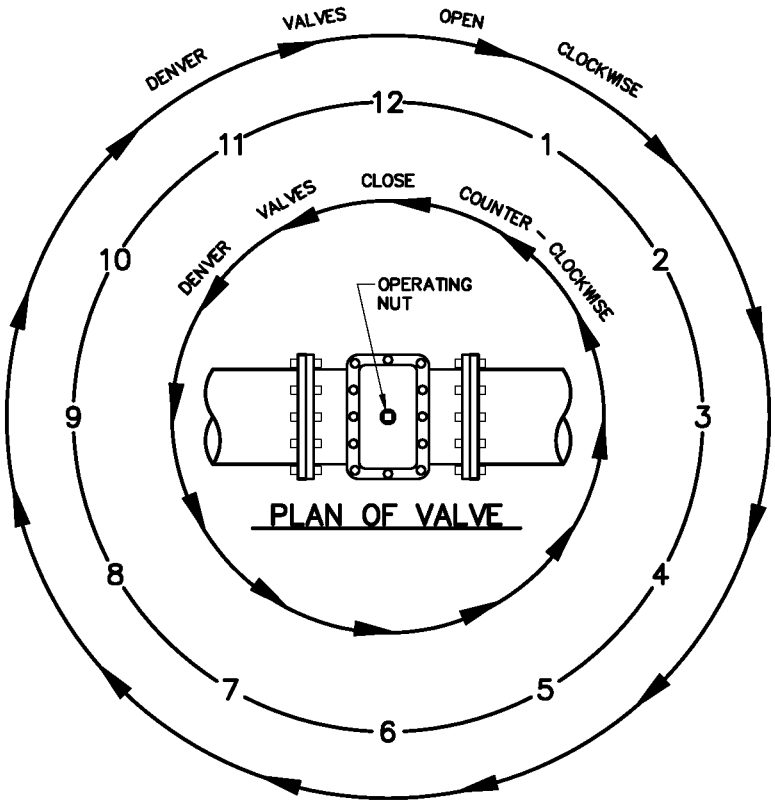

NOTE:
NORMALLY VALVES WITH A RED OPERATING NUT INDICATE A STD DENVER VALVE (OPEN RIGHT)

VALVE OPENING & CLOSING PROCEDURE

DENVER WATER
1600 West 12th Avenue • Denver, Colorado 80204
Phone(303)628-6000 • Telecopier No.(303)628-8851

VALVE OPERATION

Scale: NONE	Date: AUGUST 1995	
Drawn: C.B.B.	Tr:	Ck:
Approved:	Dr. 127	No. 35

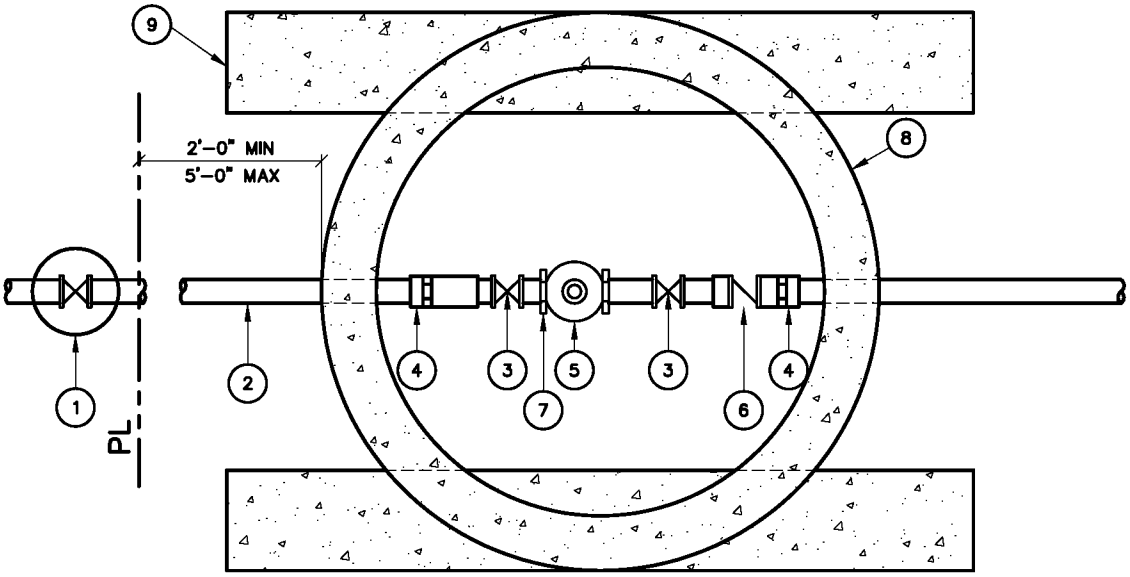

1. CURB STOP VALVE AND SERVICE BOX
2. TYPE K COPPER TUBING
3. GATE VALVE
4. FLARED COPPER TO IRON COUPLING OR DENVER WATER APPROVED EQUAL
5. METER
6. CHECK VALVE (NOT REQD IF BACKFLOW DEVICE IS INSTALLED)
7. FLANGE LOC PAC COUPLING
8. 48" CONC MH
9. CONC MH BASE BEAMS USED ONLY FOR TRAFFIC AREAS

DENVER WATER
1600 West 12th Avenue • Denver, Colorado 80204
Phone(303)628-6000 • Telecopier No.(303)628-6851

OUTSIDE SETTING FOR 1 1/2" & 2" IRRIGATION METER IN VAULT

Scale: NONE	Date: AUGUST 1995	
Drawn: C.B.B.	Tr:	Ck:
Approved:	Dr. 127	No. 35

REVISED 2004

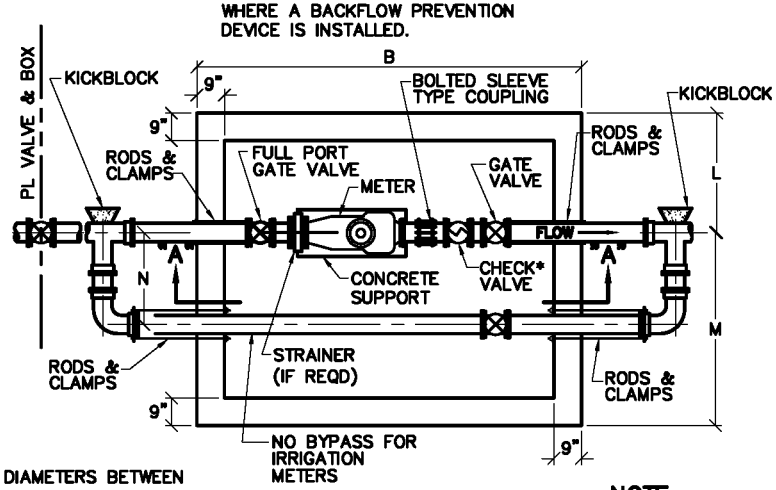

NOTE:
MIN 5 PIPE DIAMETERS BETWEEN METER AND VALVES. (BOTH SIDES)

PLAN OF PIPING

NOTE:
1" MASTIC TYP @ ALL RODS THRU WALLS.

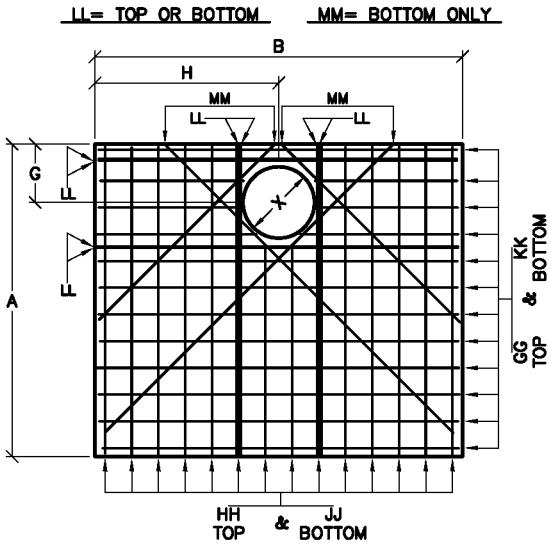

ROOF SLAB

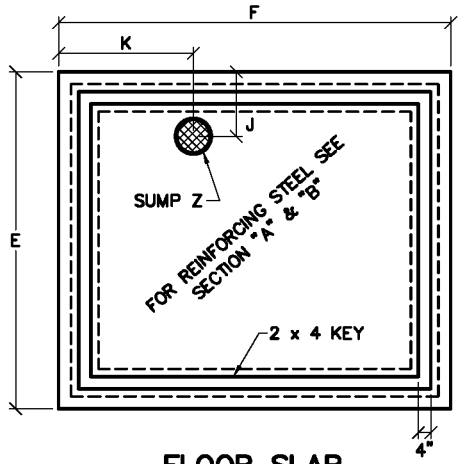

FLOOR SLAB

NOTE:
THE ROOF SLAB MAY BE CAST IN SECTIONS FOR FUTURE ACCESS. THE SECTIONS SHALL BE CAST SUCH THAT THE INDIVIDUAL SECTION WEIGHT DOES NOT EXCEED 7,500 POUNDS ACCORDING TO MS-26.

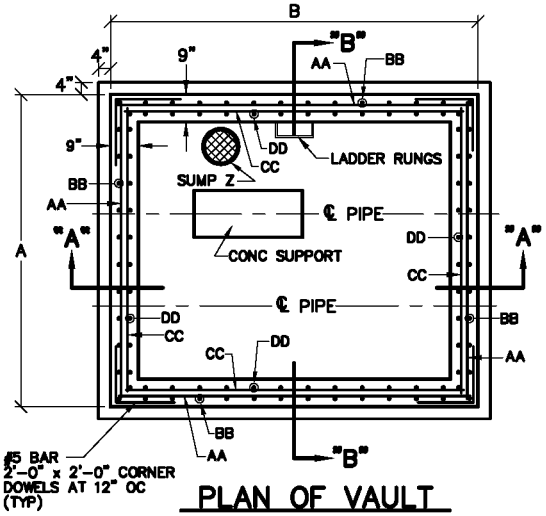

PLAN OF VAULT

*SEE 6.18 AND MS-25

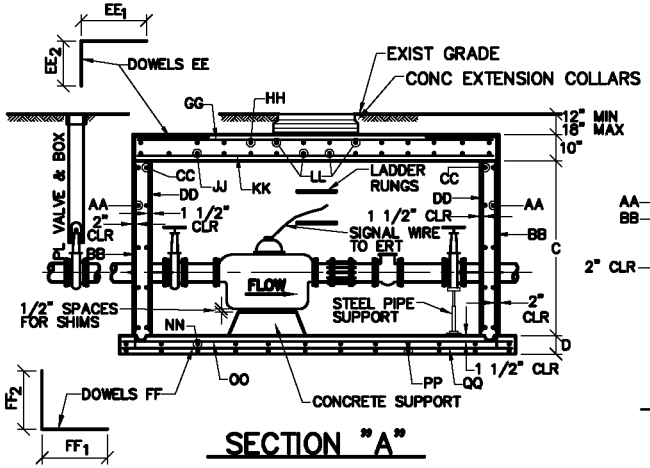

SECTION "A"

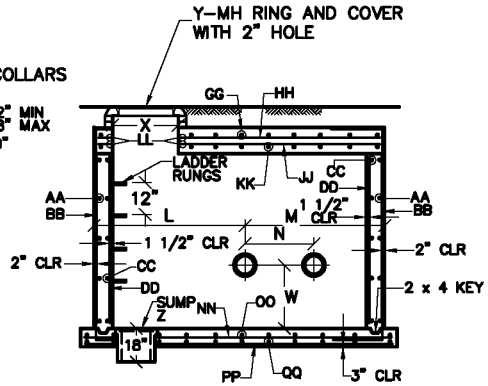

NOTE: PIPE ENCASED WITH MASTIC

SECTION "B"

NOTE:
EACH METER REQUIRES AN ELECTRONIC DIGITAL ENCODER OR MECHANICALLY ENCODED REGISTER WITH AN ITRON ERT EXCEPT FOR MASTER METER DISTRIBUTORS. DENVER WATER WILL DETERMINE TYPE OF ERT AND LOCATION PRIOR TO VAULT INSTALLATION.

NOTE:
THE DISTANCE BETWEEN RUNGS, CLEATS AND STEPS SHALL NOT EXCEED 12 INCHES AND SHALL BE UNIFORM THROUGHOUT THE LENGTH OF THE LADDER.

DENVER WATER
1600 West 12th Avenue • Denver, Colorado 80204
Phone(303)628-6000 • Telecopier No.(303)628-6851

TURBINE METER

Scale: NONE
Date: AUGUST 1995
Drawn: C.B.B.
Tr:
Ck:
Approved:
Dr. 127 No. 35

METER SIZE	WALLS								WALL DOWELS						ROOF SLAB											FLOOR SLAB							
	AA		BB		CC		DD		EE & FF		EE_1	EE_2	FF_1	FF_2	GG		HH		JJ		KK		LL		MM	NN		OO		PP		QQ	
	BAR	Dist	BAR	Dist	BAR	Dist	BAR	Dist	BAR	Dist					BAR	Dist	BAR	Dist	BAR	Dist	BAR	Dist	TOP	Bot	Bot	BAR	Dist	BAR	Dist	BAR	Dist	BAR	Dist
3"	No 4	1'-4"	No 4	1'-0"					No 5	1'-0"	2'-6"	2'-0"	3'-0"	2'-0"					No 7	1'-0"	No 7	1'-0"		No 7	No 7	No 5	1'-0"	No 5	1'-0"				
4"	No 4	1'-4"	No 4	1'-0"					No 5	1'-0"	2'-6"	2'-0"	3'-0"	2'-0"					No 7	1'-0"	No 7	1'-0"		No 7	No 7	No 5	1'-0"	No 5	1'-0"				
6"	No 4	1'-4"	No 4	1'-0"					No 5	1'-0"	2'-6"	2'-0"	3'-0"	2'-0"					No 7	1'-0"	No 7	1'-0"		No 7	No 7	No 5	1'-0"	No 5	1'-0"				
8"	No 4	1'-4"	No 5	1'-0"	No 4	1'-4"	No 5	1'-0"	No 5	1'-0"	3'-0"	2'-6"	3'-0"	2'-6"	No 5	1'-0"	No 5	1'-0"	No 7	1'-0"	No 8	9"	No 5	No 7	No 7	No 5	1'-0"	No 5	1'-0"	No 5	1'-0"	No 5	1'-0"
10"	No 4	1'-4"	No 5	1'-0"	No 4	1'-4"	No 5	1'-0"	No 5	1'-0"	3'-0"	2'-6"	3'-0"	2'-6"	No 5	1'-0"	No 5	1'-0"	No 7	1'-0"	No 8	9"	No 5	No 7	No 7	No 5	1'-0"	No 5	1'-0"	No 5	1'-0"	No 5	1'-0"
12"	No 4	1'-4"	No 5	1'-0"	No 4	1'-4"	No 5	1'-0"	No 5	1'-0"	3'-0"	2'-6"	3'-0"	2'-6"	No 5	1'-0"	No 5	1'-0"	No 7	1'-0"	No 8	9"	No 5	No 7	No 7	No 5	1'-0"	No 5	1'-0"	No 5	1'-0"	No 5	1'-0"

SEE SHEET 74 FOR DRAWINGS CORRESPONDING TO THESE DIMENSIONS

METER SIZE	PIPE SIZE ø	VAULT DIMENSIONS															MH		SUMP
		A	B	C*	D	E	F	G	H	J	K	L	M	N	P	W	X	Y	Z
3"	3"	8'-6"	10'-6"	6'-0"	8"	9'-2"	11'-2"	2'-3"	4'-8"	1'-9"	2'-8"	3'-3"	5'-3"	2'-6"	9"	2'-0"	3'-0"	24"x 36"	1'-0"
4"	4"	8'-6"	11'-11"	6'-0"	8"	9'-2"	12'-7"	2'-3"	5'-4"	1'-9"	3'-4"	3'-3"	5'-3"	2'-6"	1'-0"	2'-6"	3'-0"	24"x 36"	1'-0"
6"	6"	8'-6"	13'-6"	6'-0"	8"	9'-2"	14'-2"	2'-3"	5'-8"	1'-9"	3'-8"	3'-3"	5'-3"	2'-6"	1'-6"	2'-6"	3'-0"	24"x 36"	1'-0"
8"	8"	8'-6"	15'-5"	6'-0"	10"	9'-2"	16'-1"	2'-3"	5'-3"	2'-3"	3'-0"	3'-3"	5'-3"	2'-6"	2'-0"	2'-6"	3'-0"	24"x 36"	1'-6"
10"	10"	8'-6"	17'-9"	6'-0"	10"	9'-2"	17'-5"	2'-3"	4'-11"	2'-3"	3'-0"	3'-3"	5'-3"	2'-6"	2'-6"	2'-6"	3'-0"	24"x 36"	1'-6"
12"	12"	8'-6"	19'-10"	6'-0"	10"	9'-2"	20'-6"	2'-3"	5'-0"	2'-3"	3'-0"	3'-3"	5'-3"	2'-6"	3'-0"	2'-6"	3'-0"	24"x 36"	1'-6"

*NOTE: DIMENSION C IS A MIN SUGGESTED HEIGHT.

NOTES:

SEE SHEET 57 FOR WALL PLATES AND BODY CLAMPS.
SEE SHEET 58 FOR WALL PLATES.
USE 5/16"x 7" MIDDLE RING ON BOLTED SLEEVE TYPE COUPLINGS.
USE 5/16"x 7" MIDDLE RING ON BOLTED SLEEVE TYPE COUPLINGS.
USE 3/8"x 7" MIDDLE RING ON BOLTED SLEEVE TYPE COUPLINGS.
USE 3/8"x 7" MIDDLE RING ON BOLTED SLEEVE TYPE COUPLINGS.

DENVER WATER
1600 West 12th Avenue • Denver, Colorado 80204
Phone(303)628-6000 • Telecopier No.(303)628-6851

TURBINE METER DIMENSIONS

Scale: NONE
Date: AUGUST 1995
Drawn: C.B.B.
Tr:
Ck:
Approved:
Dr. 127 No. 35

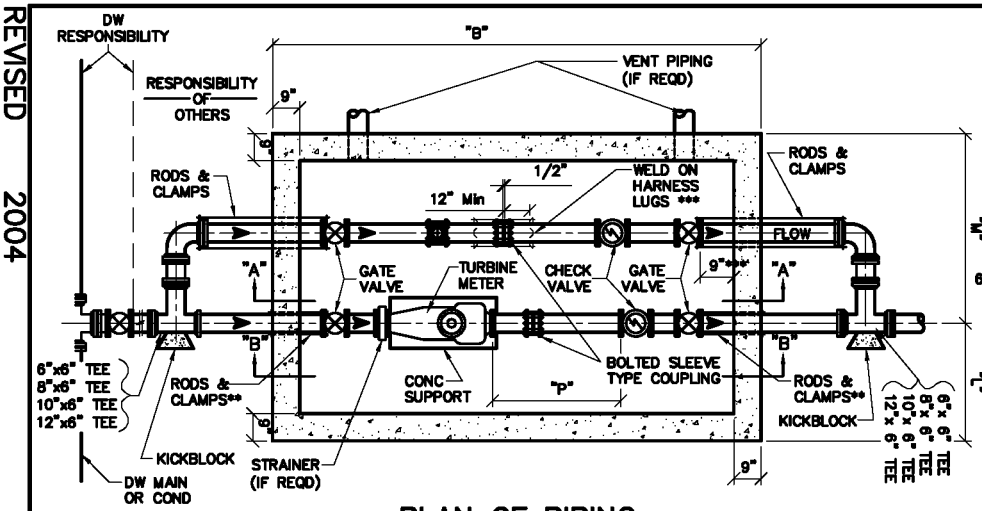

PLAN OF PIPING

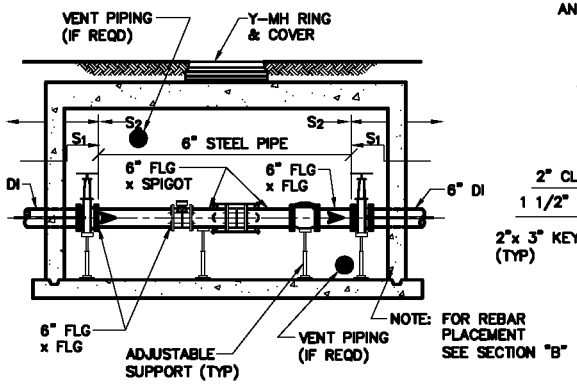

SECTION "A"

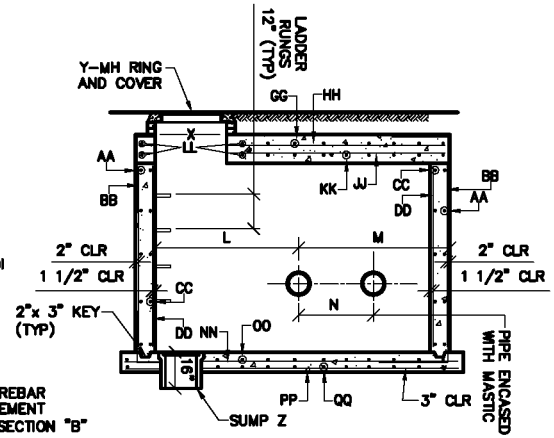

SECTION "C"

* SEE PARAGRAPH 6.18 AND MS-25.
** SEE SHEET 25 (NO STANDARD FOR 12" PIPE).
*** SEE SHEET 24.

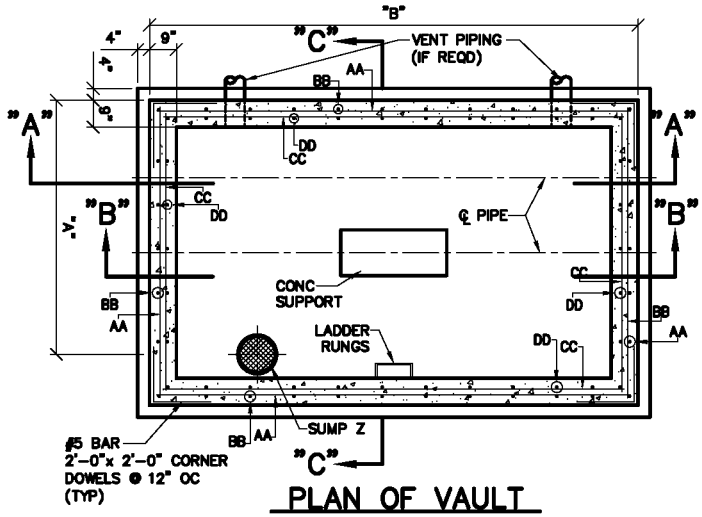

PLAN OF VAULT

NOTES:

PROVIDE VAULT POWER, VENTING, SUMP PUMP, AND TELEMETRY AS REQD BY DENVER WATER. THE DISTANCE BETWEEN RUNGS, CLEATS, AND STEPS SHALL NOT EXCEED 12 INCHES AND SHALL BE UNIFORM THROUGHOUT THE LENGTH OF THE LADDER.

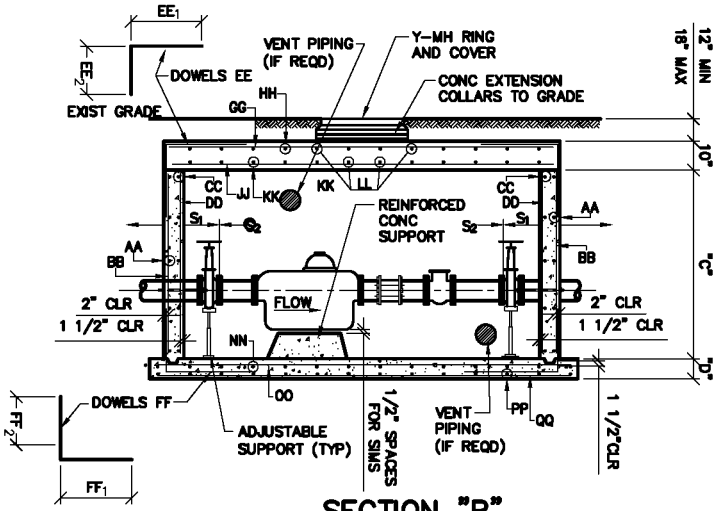

SECTION "B"

NOTES:

S_1 – TO BE INSTALLED AT TIME OF VAULT CONSTRUCTION. APPROPRIATE SIZE OF BLIND FLANGE TO BE INSTALLED.

S_2 – TO BE INSTALLED AT A LATER DATE. ONLY ONE OF THESE METERS IS TO BE INSTALLED AT ANY GIVEN TIME BASED UPON CONTRACT. OTHER SIDE IS TO REMAIN VACANT AND BLIND FLANGED.

POLYWRAP ALL BURIED PIPE, VALVES, FITTINGS, AND CLAMPS. REINFORCEMENT SHOWN IS MINIMUM.

DENVER WATER
1600 West 12th Avenue • Denver, Colorado 80204
Phone(303)628-6000 • Telecopier No.(303)628-6851

MASTER METER FOR EMERGENCY INTERCONNECTION PLANS

Scale: NONE
Date: JUNE 1995
Drawn: C.B.B.
Tr:
Ck:
Approved:
Dr. 127 No. 35

REVISED 2004

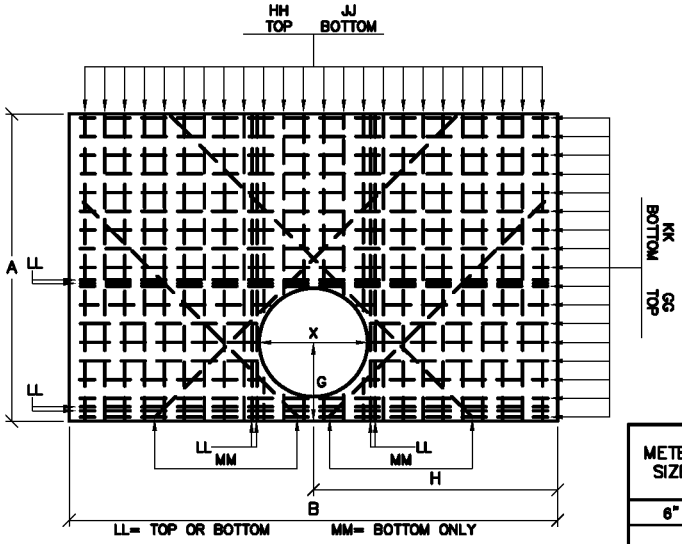

ROOF SLAB

METER SIZE	PIPE SIZE ø	VAULT DIMENSIONS															MH		SUMP	REMARKS
		A	B	C*	D	E	F	G	H	J	K	L	M	N	P	W	X	Y	Z	
6"	6"	8'-6"	13'-6"	6'-0"	8"	9'-2"	14'-2"	2'-3"	5'-8"	1'-9"	3'-8"	3'-3"	5'-3"	2'-6"	1'-6"	2'-6"	36"	24"x36"	1'-0"	USE 5/16"x 7" MIDDLE RING ON COUPLING
8"	8"	8'-6"	15'-5"	6'-0"	10"	9'-2"	16'-1"	2'-3"	5'-3"	2'-3"	3'-0"	3'-3"	5'-3"	2'-6"	2'-0"	2'-6"	36"	24"x36"	1'-6"	USE 5/16"x 7" MIDDLE RING ON COUPLING
10"	10"	8'-6"	17'-9"	6'-0"	10"	9'-2"	17'-5"	2'-3"	4'-11"	2'-3"	3'-0"	3'-3"	5'-3"	2'-6"	2'-6"	2'-6"	36"	24"x36"	1'-6"	USE 3/8"x 7" MIDDLE RING ON COUPLING
12"	12"	8'-6"	19'-10"	6'-0"	10"	9'-2"	20'-6"	2'-3"	5'-0"	2'-3"	3'-0"	3'-3"	5'-3"	2'-6"	3'-0"	2'-6"	36"	24"x36"	1'-6"	USE 3/8"x 7" MIDDLE RING ON COUPLING

METER SIZE	WALLS								WALL DOWELS						ROOF SLAB										FLOOR SLAB								
	AA		BB		CC		DD		EE & FF		EE_1	EE_2	FF_1	FF_2	GG		HH		JJ		KK		LL		MM	NN		OO		PP		QQ	
	BAR	DIST	BAR	DIST	BAR	DIST	BAR	DIST	BAR	DIST					BAR	DIST	BAR	DIST	BAR	DIST	BAR	DIST	TOP	BOT	BOT	BAR	DIST	BAR	DIST	BAR	DIST	BAR	DIST
6"	No. 4	1'-4"	No	1'-0"					No	1'-0"	2'-6"	2'-0"	3'-0"	2'-0"					No	1'-0"	No	1'-0"		No	No	No	1'-0"	No	1'-0"				
8"	No. 4	1'-4"	No	1'-0"	No	1'-4"	No	1'-0"	No	1'-0"	3'-0"	2'-6"	3'-0"	2'-6"	No	1'-0"	No	1'-0"	No	1'-0"	No	9"	No	No	No	No	1'-0"	No	1'-0"			No	1'-0"
10"	No. 4	1'-4"	No	1'-0"	No	1'-4"	No	1'-0"	No	1'-0"	3'-0"	2'-6"	3'-0"	2'-6"	No	1'-0"	No	1'-0"	No	1'-0"	No	9"	No	No	No	No	1'-0"	No	1'-0"			No	1'-0"
12"	No. 4	1'-4"	No	1'-0"	No	1'-4"	No	1'-0"	No	1'-0"	3'-0"	2'-6"	3'-0"	2'-6"	No	1'-0"	No	1'-0"	No	1'-0"	No	9"	No	No	No	No	1'-0"	No	1'-0"			No	1'-0"

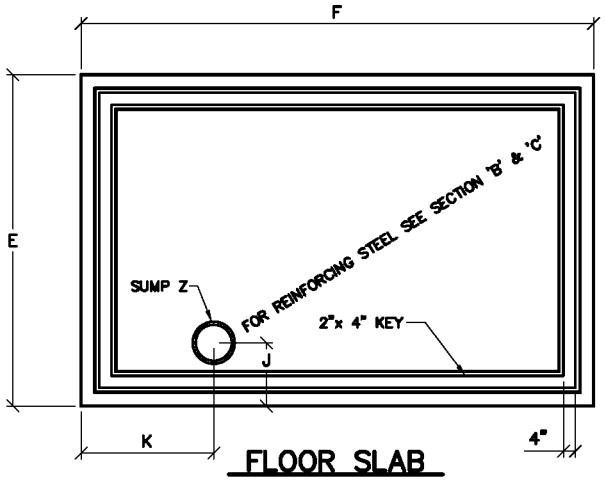

FLOOR SLAB

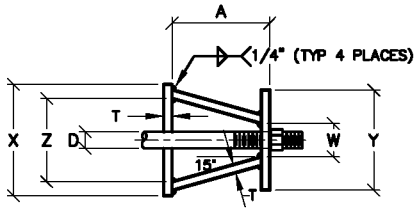

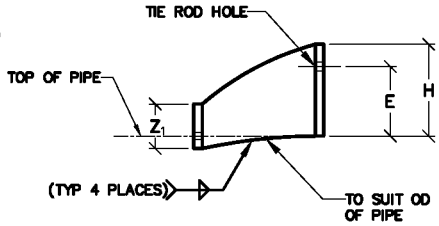

NOTE:

THE ROOF SLAB MAY BE CAST IN SECTIONS FOR FUTURE ACCESS. THE SECTIONS SHALL BE CAST SUCH THAT THE INDIVIDUAL SECTION WEIGHT DOES NOT EXCEED 7,500 POUNDS ACCORDING TO MS-26.

HARNESS LUG DIMENSIONS

CARRIER PIPE NOMINAL ø	STUD ø D	A	W	Z	T	H	E	H_1	Y	X
6"	3/4"	5"	1 1/2"	3 3/4"	3/8"	4 1/8"	3 1/8"	2"	4 1/2"	5"

DENVER WATER
1600 West 12th Avenue • Denver, Colorado 80204
Phone(303)628-6000 • Telecopier No.(303)628-6851

MASTER METER
FOR EMERGENCY INTERCONNECTION
DETAILS AND DIMENSIONS

Scale: NONE | Date: AUGUST 1995
Drawn: C.B.B. | Tr: | Ck:
Approved: | Dr. 127 | No. 35

REVISED 2004

SHEET 77

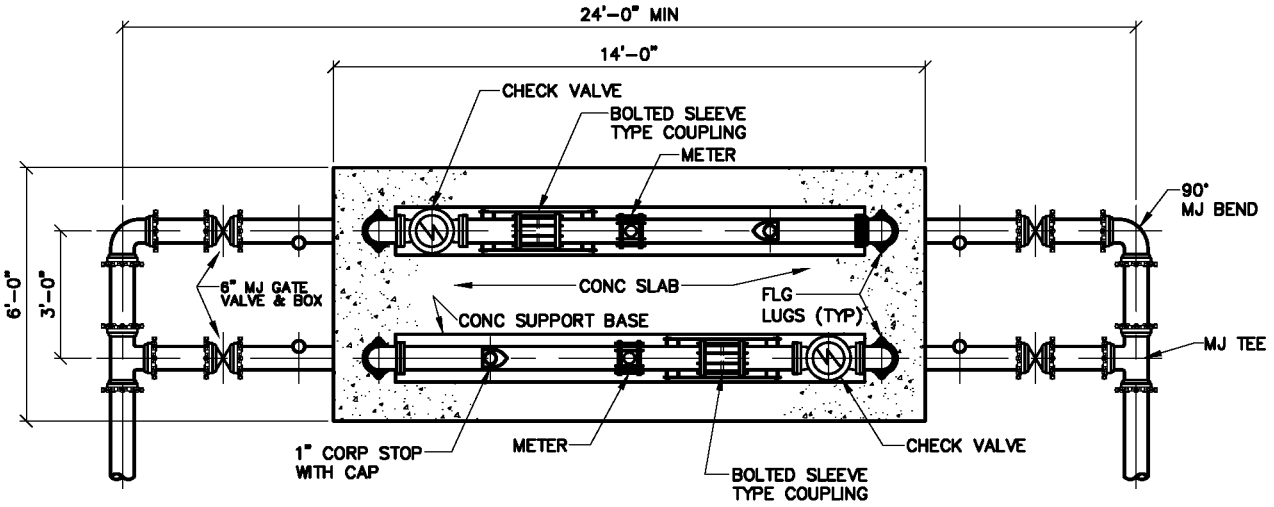

PLAN

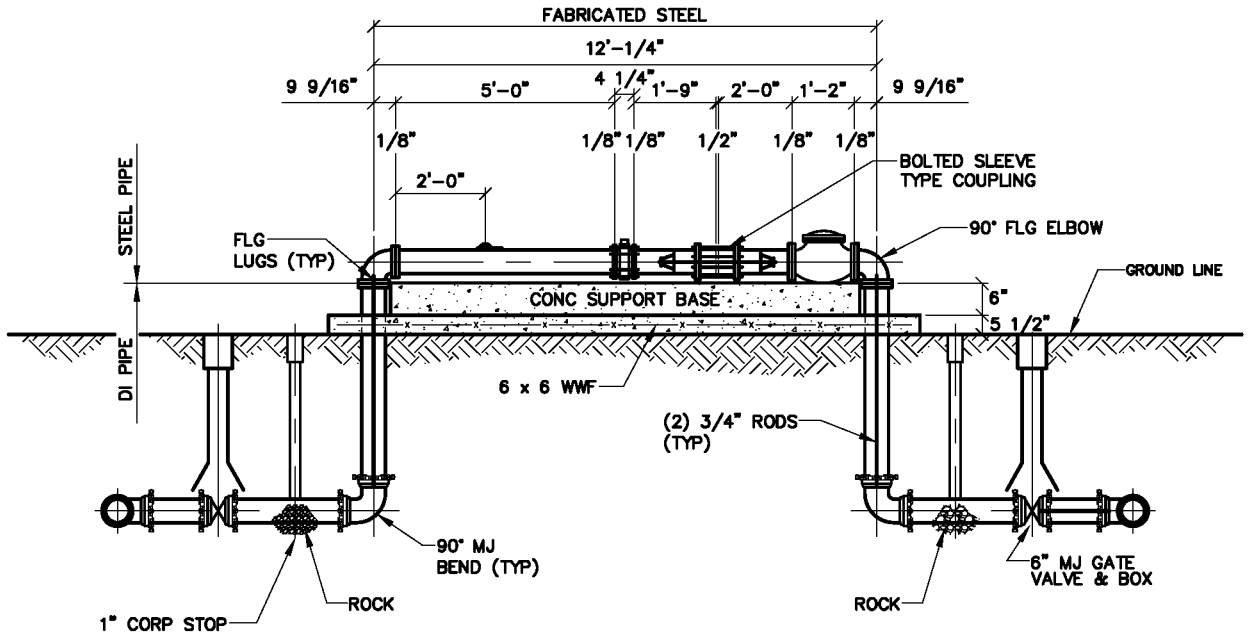

ELEVATION

DENVER WATER
1600 West 12th Avenue · Denver, Colorado 80204
Phone(303)628-6000 · Telecopier No.(303)628-6851

ABOVE GROUND DUAL SYSTEM INTERCONNECTION

Scale: NONE	Date: AUGUST 1995	
Drawn: C.B.B.	Tr:	Ck:
Approved:	Dr. 127	No. 35

REVISED 2004

SHEET 78

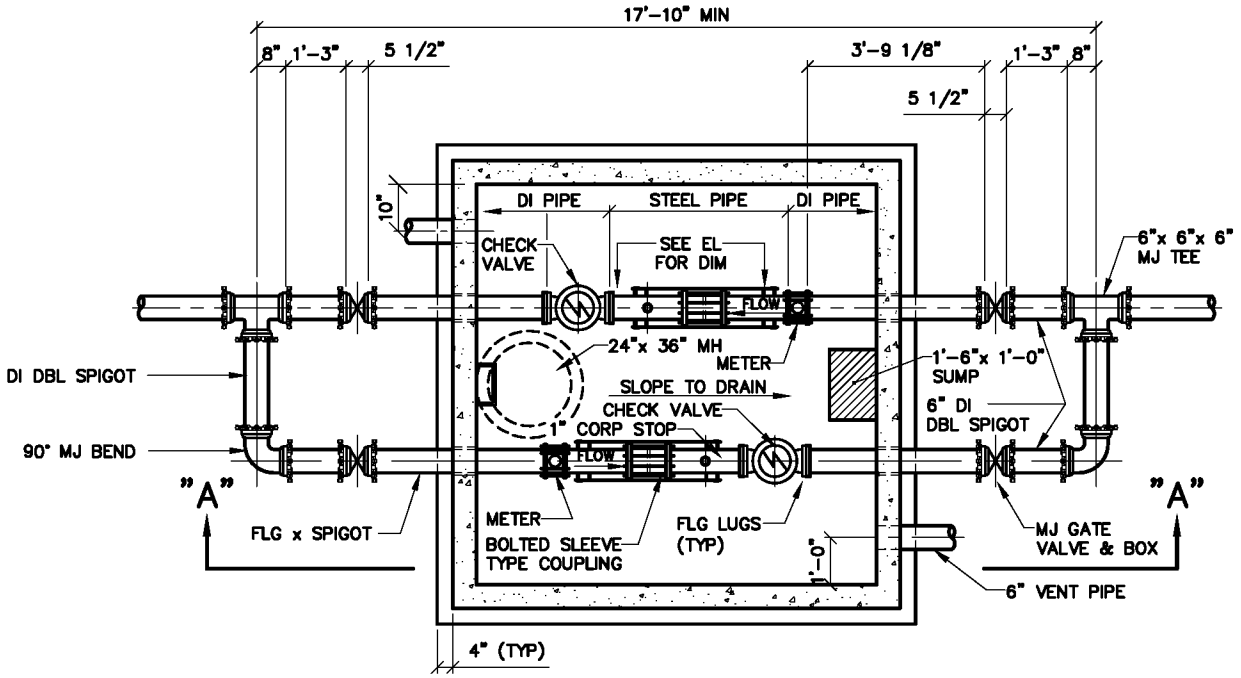

PLAN

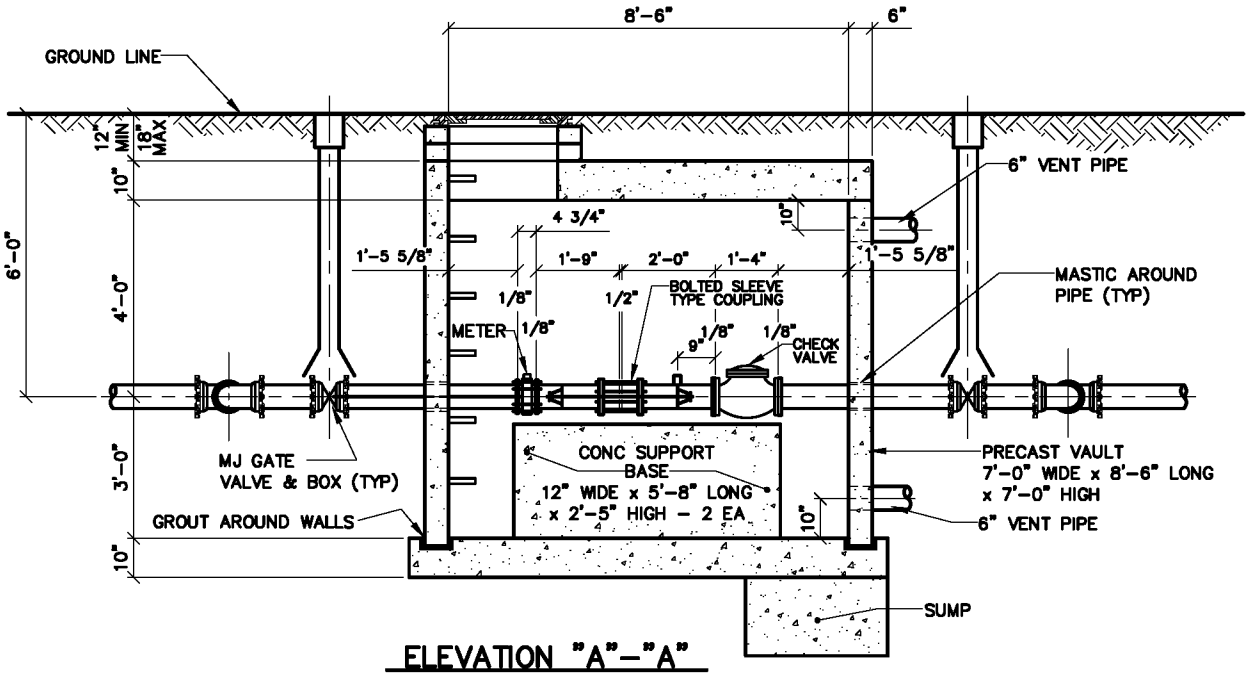

ELEVATION "A"-"A"

NOTE:

THE DISTANCE BETWEEN RUNGS, CLEATS, AND STEPS SHALL NOT EXCEED 12 INCHES AND SHALL BE UNIFORM THROUGHOUT THE LENGTH OF THE LADDER.

DENVER WATER
1600 West 12th Avenue • Denver, Colorado 80204
Phone(303)628-6000 • Telecopier No.(303)628-6851

BELOW GROUND DUAL SYSTEM INTERCONNECTION

Scale: NONE		Date: AUGUST 1995	
Drawn: C.B.B.	Tr:	Ck:	
Approved:		Dr. 127	No. 35

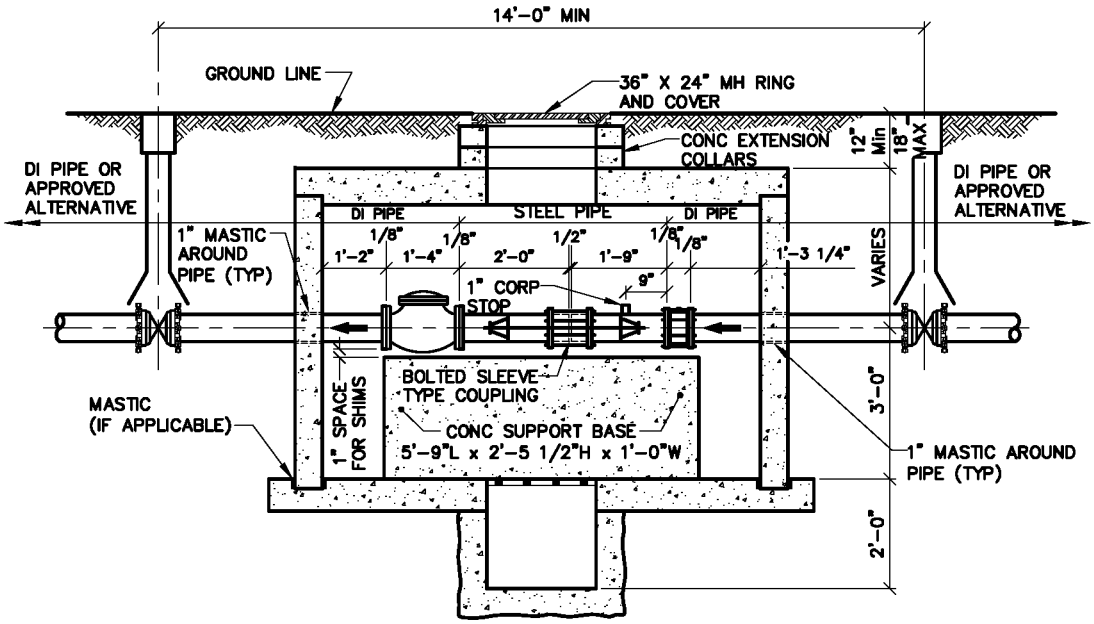

ELEVATION

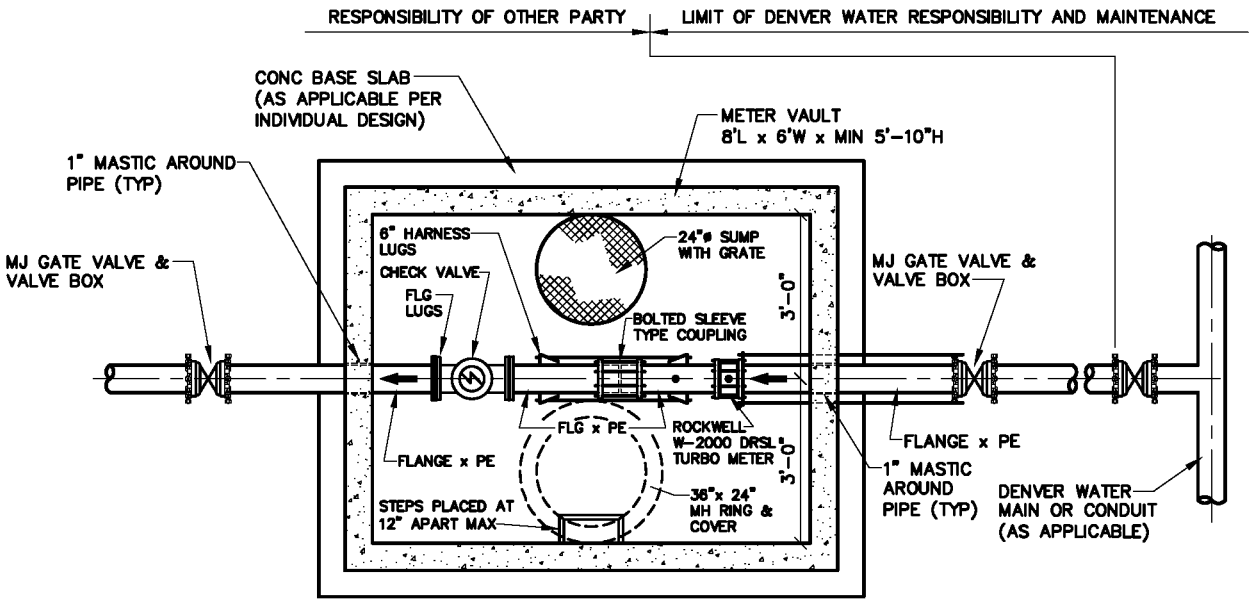

PLAN

NOTES:

1. METER VAULT DESIGN TO BE SUBMITTED AND APPROVED FOR EACH INDIVIDUAL INSTALLATION. DESIGN SHALL CONFORM TO DENVER WATER ENGINEERING STANDARDS LATEST REVISION.
2. THE DISTANCE BETWEEN RUNGS, CLEATS, AND STEPS SHALL NOT EXCEED 12 INCHES AND SHALL BE UNIFORM THROUGHOUT THE LENGTH OF THE LADDER.

DENVER WATER
1600 West 12th Avenue · Denver, Colorado 80204
Phone(303)628-6000 · Telecopier No.(303)628-6851

SINGLE FEED SYSTEM INTERCONNECTION

Scale: NONE	Date: JUNE 1995	
Drawn: C.B.B.	Tr:	Ck:
Approved:	Dr. 127	No. 35

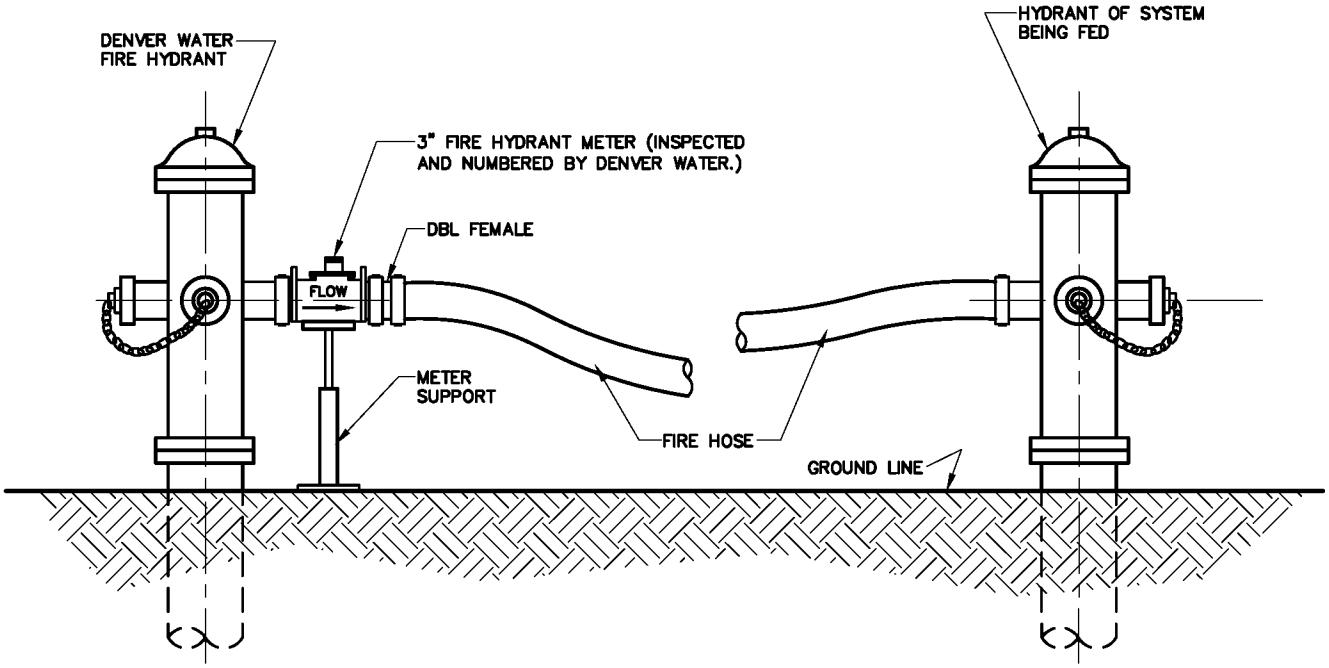

DENVER WATER
1600 West 12th Avenue • Denver, Colorado 80204
Phone(303)628-6000 • Telecopier No.(303)628-6851

STANDARD DESIGN FOR HYDRANT INTERCONNECTION

Scale: NONE	Date: AUGUST 1995	
Drawn: C.B.B.	Tr:	Ck:
Approved:	Dr. 127	No. 35

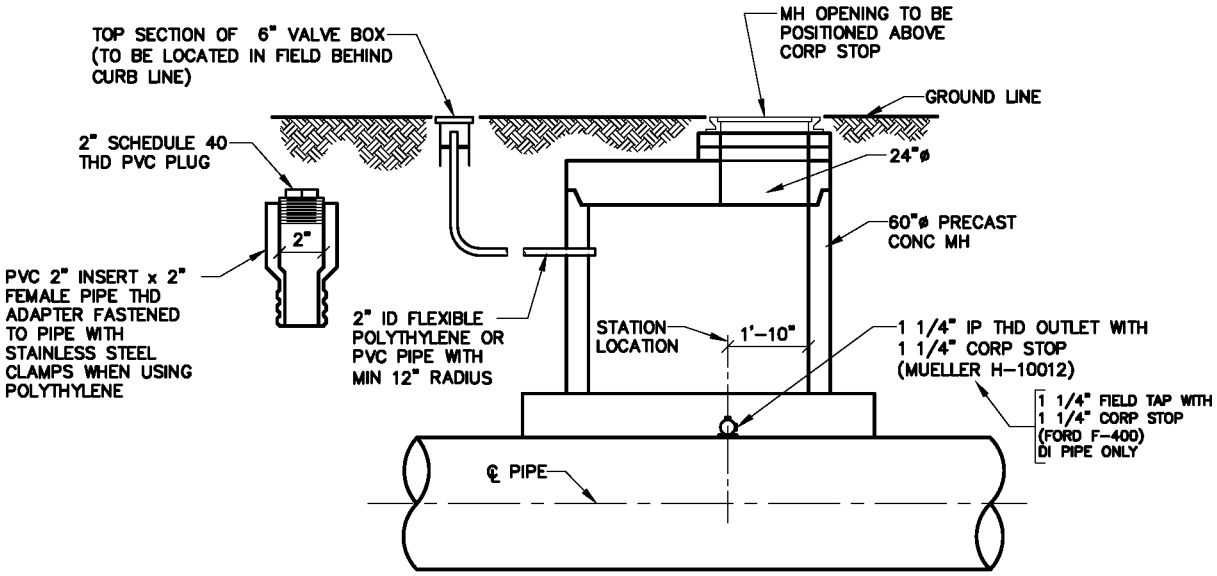

ELEVATION

NOTES:

1. THE PURPOSE OF THIS INSTALLATION IS TO ALLOW FOR RECORDING THE FLOWS IN THE PIPE OVER A PERIOD OF TIME WITH A DEVICE CALLED A PITOT TUBE, WHICH IS INSERTED INTO THE PIPE THROUGH THE CORPORATION STOP.
2. THE DISTANCE BETWEEN RUNGS, CLEATS, AND STEPS SHALL NOT EXCEED 12 INCHES AND SHALL BE UNIFORM THROUGHOUT THE LENGTH OF THE LADDER.

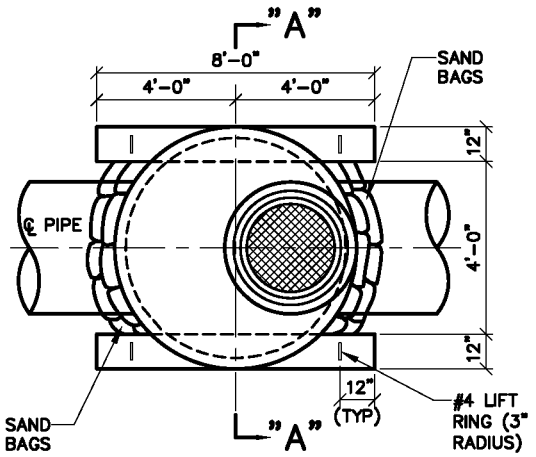

PLAN

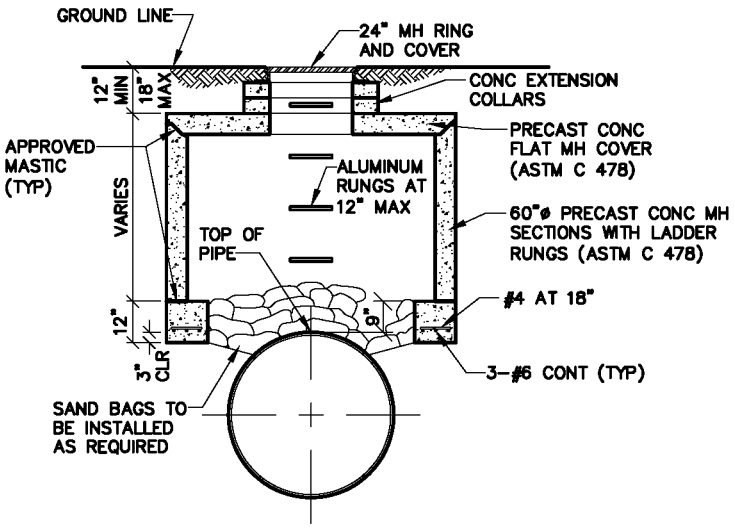

SECTION "A"-"A"

TYPICAL CONC MH INSTALLATION

DENVER WATER
1600 West 12th Avenue • Denver, Colorado 80204
Phone(303)628-6000 • Telecopier No.(303)628-6851

PITOT INSTALLATION & TYPICAL CONC MH INSTALLATION

Scale: NONE	Date: AUGUST 1995	
Drawn: C.B.B.	Tr:	Ck:
Approved:	Dr. 127	No. 35

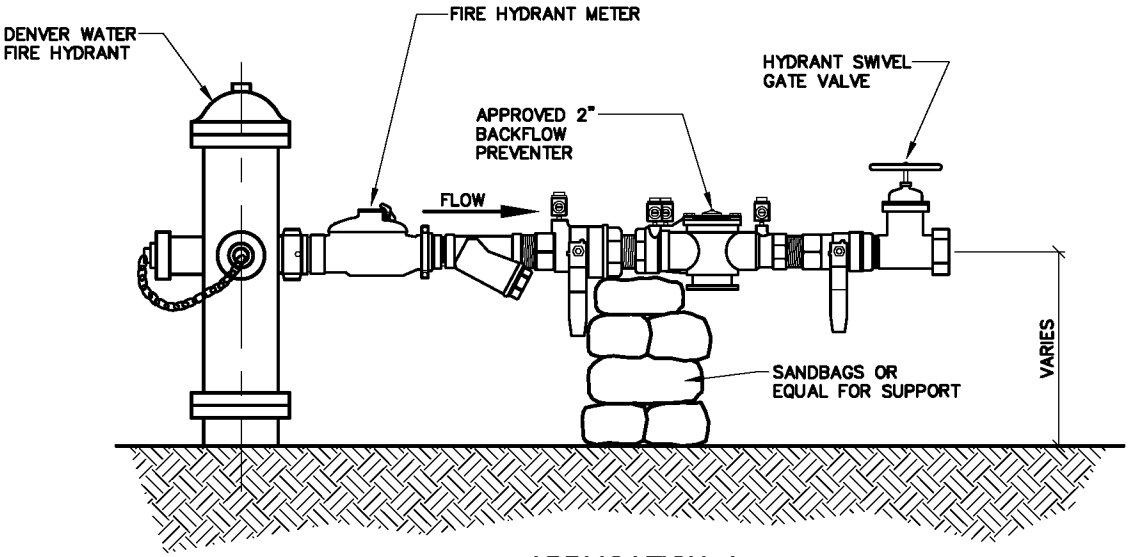

APPLICATION 1

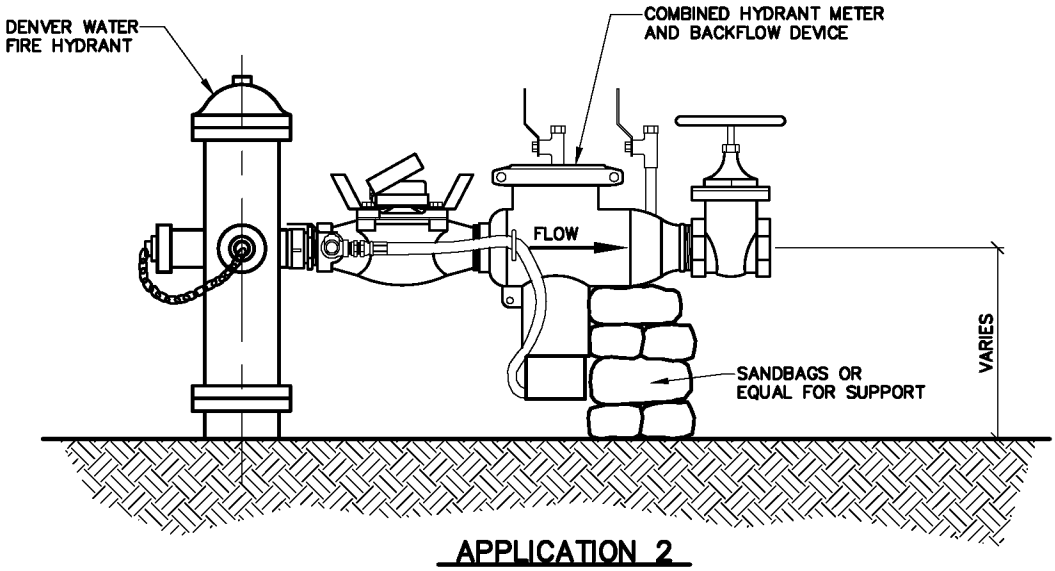

APPLICATION 2

NOTES:

1. USE OF HYDRANT REQUIRES VALID HYDRANT USE PERMIT. CONTACT DENVER WATER SALES OFFICE FOR APPLICATION.
2. METER AND RPZ BACKFLOW DEVICE SHALL BE FULLY SUPPORTED WHEN CONNECTED TO FIRE HYDRANT.
3. METER AND RPZ BACKFLOW DEVICE SHALL BE APPROVED BY DENVER WATER. (MS-30) METER MUST BE INSPECTED AND NUMBERED BY DENVER WATER BEFORE BEING PLACED IN SERVICE.
4. METER SHALL BE TESTED ANNUALLY BY DENVER WATER.
5. BACKFLOW DEVICE SHALL BE TESTED ANNUALLY AND COPY OF TEST SHALL BE SENT TO DENVER WATER, BEFORE USAGE WILL BE ALLOWED.
6. CONTRACTOR WILL BE HELD RESPONSIBLE FOR ANY DAMAGE TO FIRE HYDRANT DURING USE.

DENVER WATER
1600 West 12th Avenue • Denver, Colorado 80204
Phone(303)628-6000 • Telecopier No.(303)628-6851

STANDARD DESIGN FOR HYDRANT METER INSTALLATION

Scale: NONE	Date: DECEMBER 1999	
Drawn: C.B.B.	Tr:	Ck:
Approved:	Dr. 127	No. 35

MAINGUARD NO 79 BLOWOFF HYDRANT

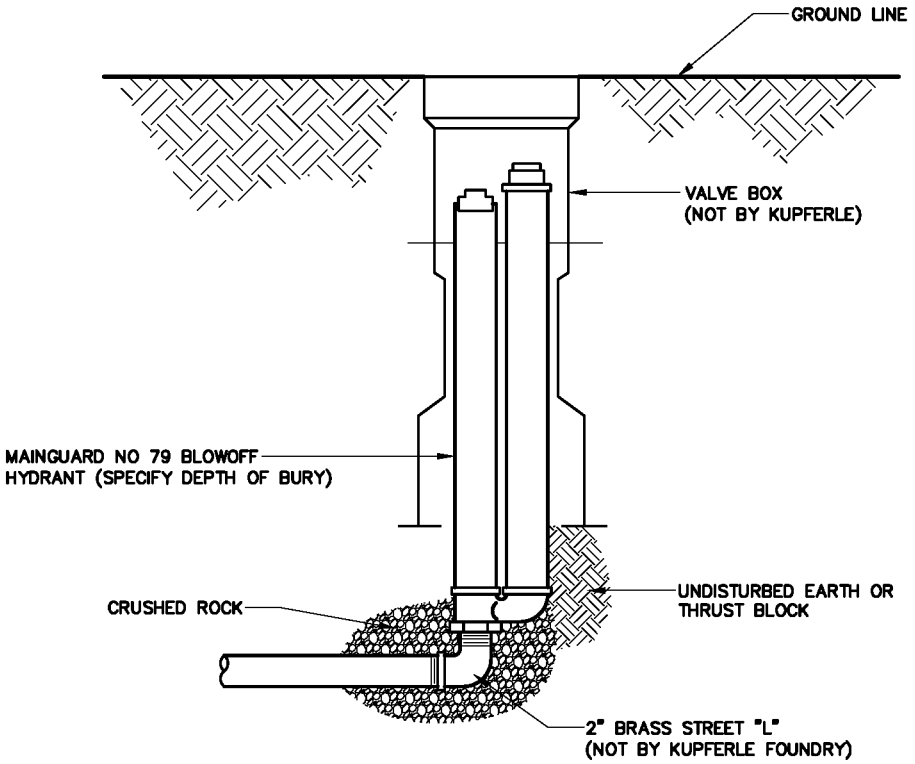

BLOWOFF HYDRANTS SHALL BE NON-FREEZING, SELF DRAINING TYPE, WITH AN OVERALL LENGTH OF 4'. SET UNDERGROUND IN A 5 1/4" VALVE BOX, THESE HYDRANTS WILL BE FURNISHED WITH A 2" FIP INLET, A NON-TURNING OPERATING ROD, AND SHALL OPEN TO THE LEFT. ALL OF THESE WORKING PARTS SHALL BE OF BRONZE-TO-BRONZE DESIGN, AND BE SERVICEABLE FROM ABOVE GRADE WITH NO DIGGING. THE OUTLET SHALL BE A 2" FIP COUPLING WITH PLUG, AS MANUFACTURED BY KUPFERLE FOUNDRY CO, ST. LOUIS, MO, OR APPROVED EQUAL.

(SPECIFY OVERALL LENGTH 6" SHORTER THAN NORMAL DEPTH OF BURY.)

DENVER WATER
1600 West 12th Avenue • Denver, Colorado 80204
Phone(303)628-6000 • Telecopier No.(303)628-6851

STANDARD DESIGN FOR BLOWOFF HYDRANT

Scale: NONE	Date: MAY 2000	
Drawn: C.B.B.	Tr:	Ck:
Approved:	Dr. 127	No. 35

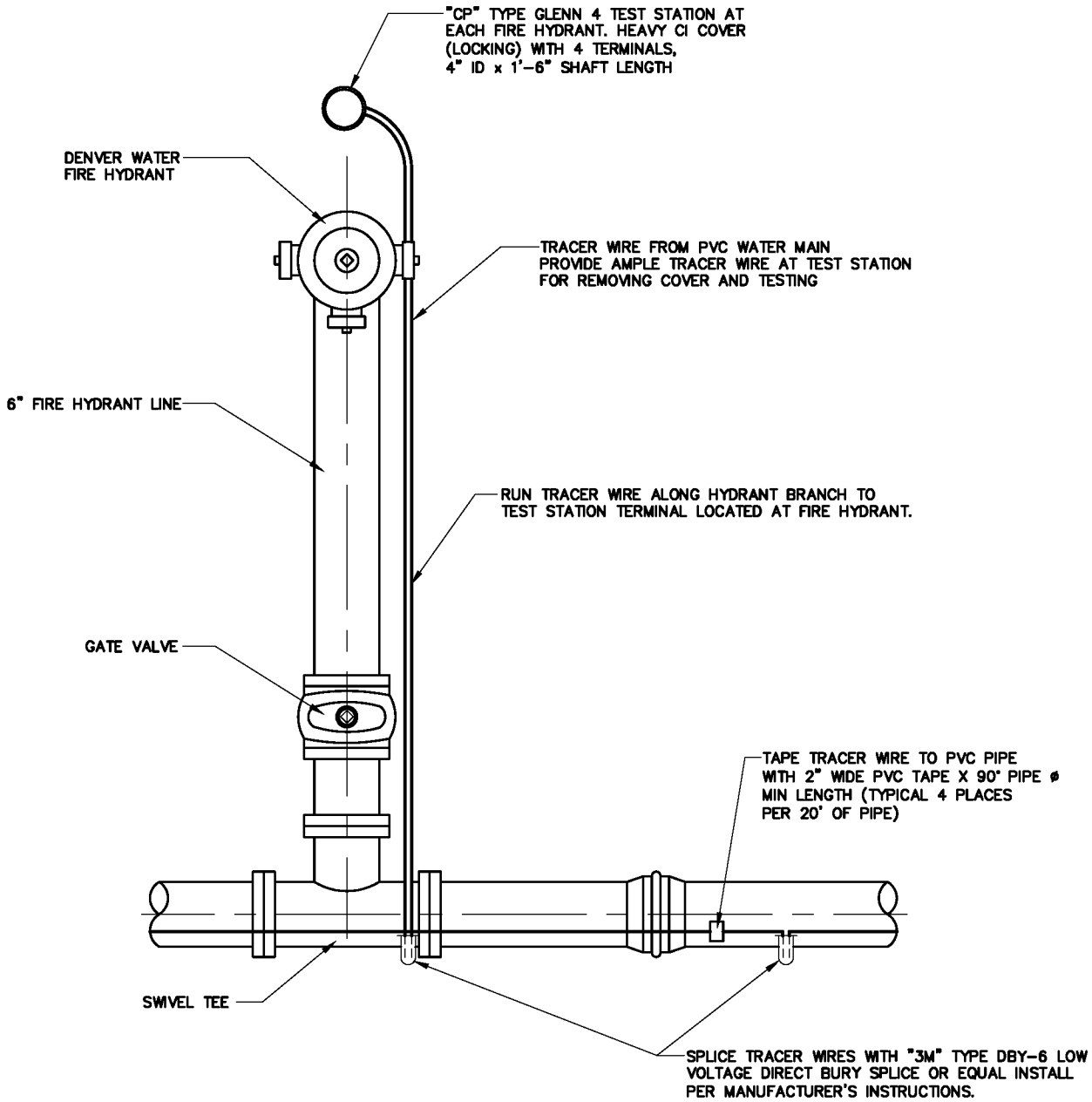

DENVER WATER
1600 West 12th Avenue • Denver, Colorado 80204
Phone(303)628-6000 • Telecopier No.(303)628-6851

TRACER WIRE INSTALLATION FOR PVC WATER MAIN

Scale: NONE	Date: JUNE 2000	
Drawn: C.B.B.	Tr:	Ck:
Approved:	Dr. 127	No. 35

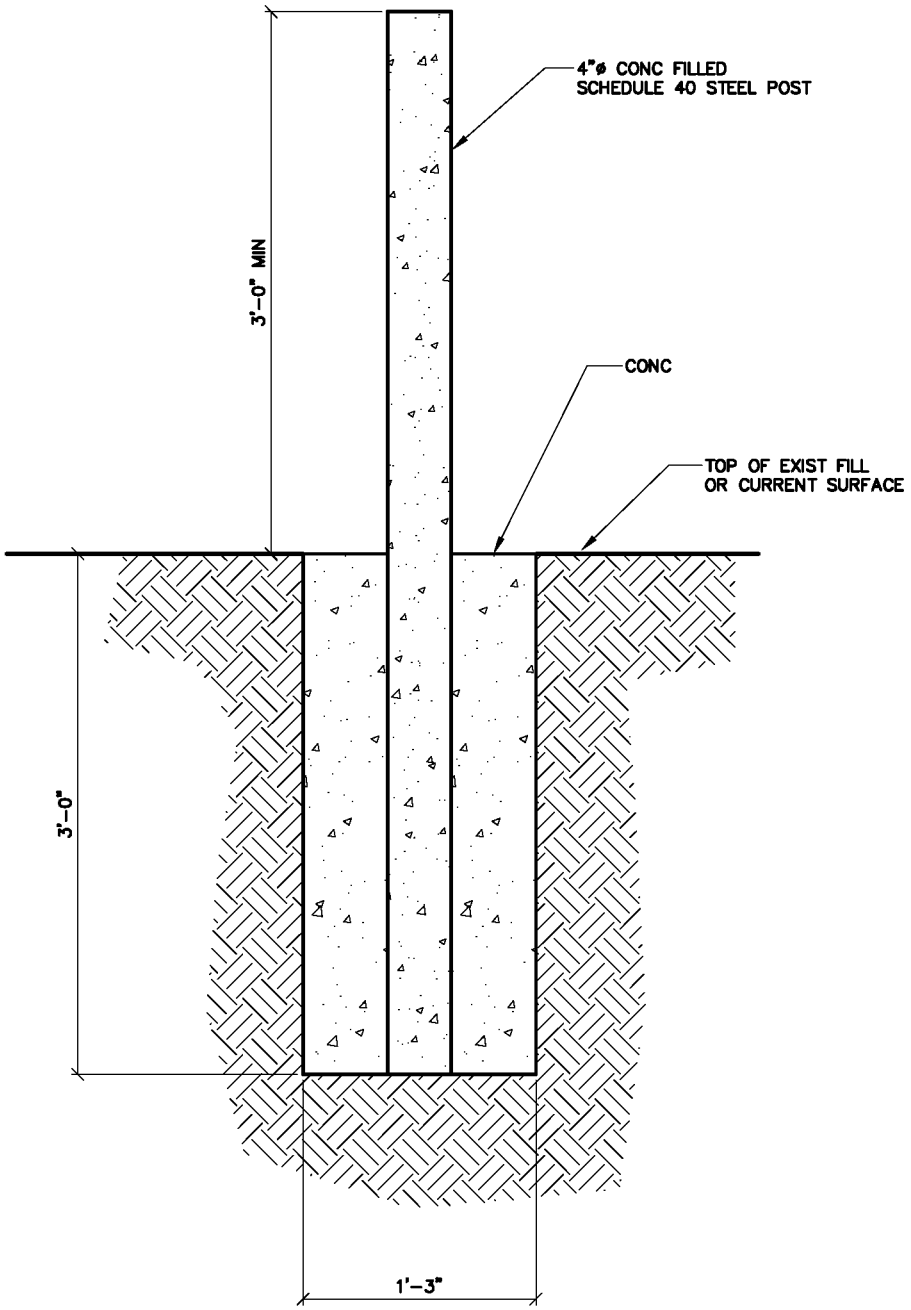

DENVER WATER
1600 West 12th Avenue • Denver, Colorado 80204
Phone(303)628-6000 • Telecopier No.(303)628-6851

TRAFFIC IMPEDIMENT BOLLARD

Scale: NONE	Date: JULY 2000	
Drawn: C.B.B.	Tr:	Ck:
Approved:	Dr. 127	No. 35

REVISED 2004

SHEET 86

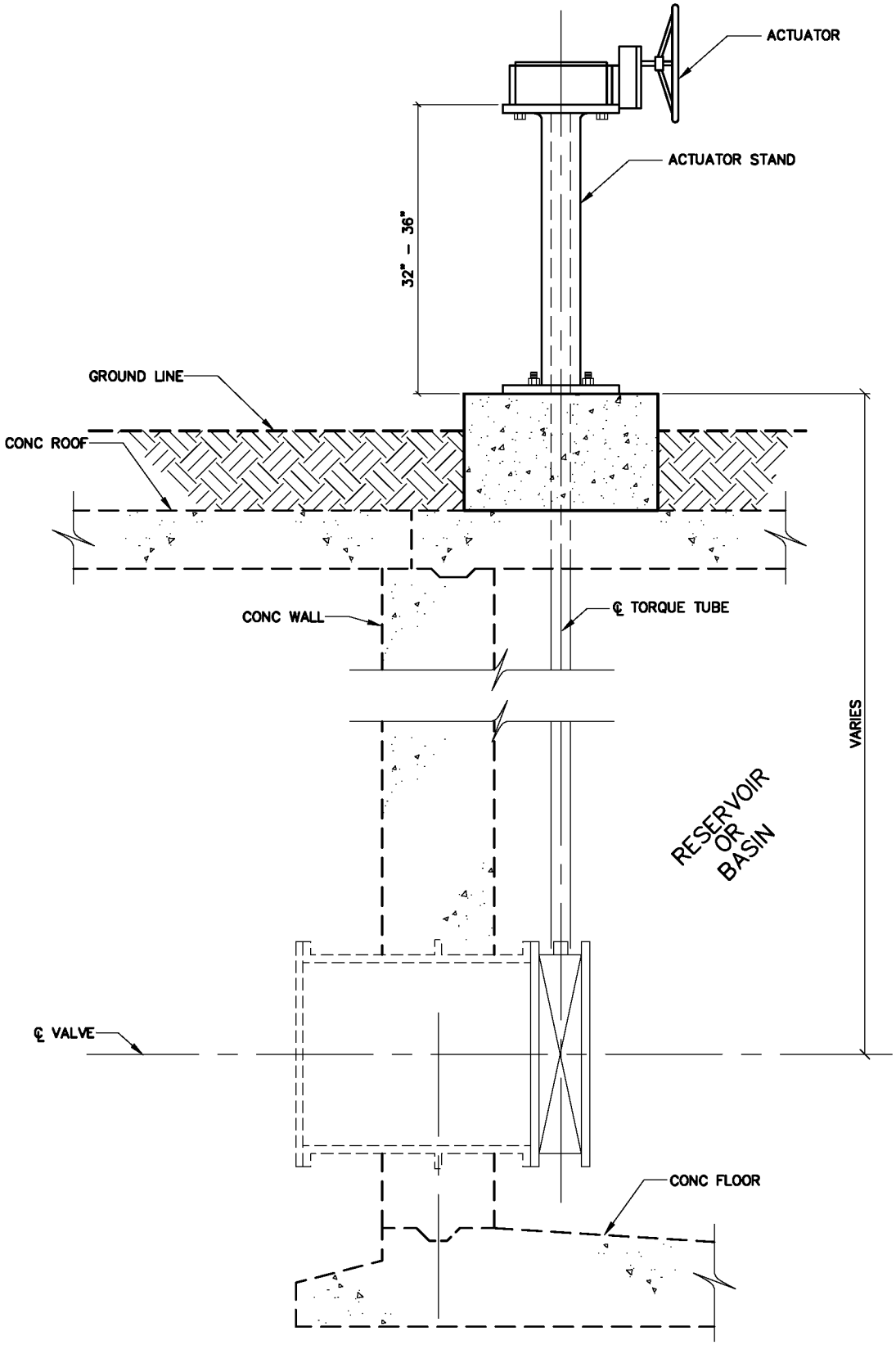

DENVER WATER
1600 West 12th Avenue • Denver, Colorado 80204
Phone(303)628–6000 • Telecopier No.(303)628–6851

SUBMERGED BFV w/TORQUE TUBE AND ACTUATOR STAND

Scale: NONE	Date: FEBRUARY 2004	
Drawn: C.B.B.	Tr:	Ck:
Approved:	Dr. 127	No. 35

REVISED 2004

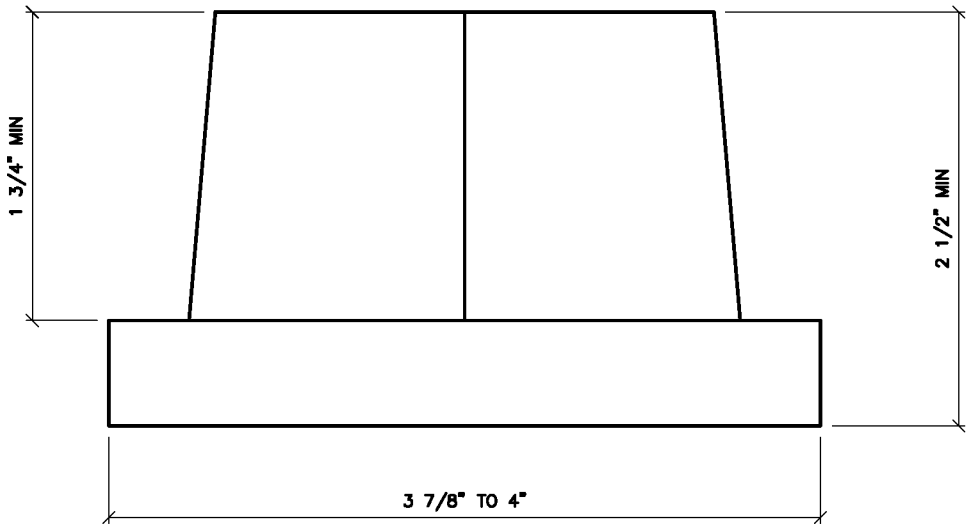

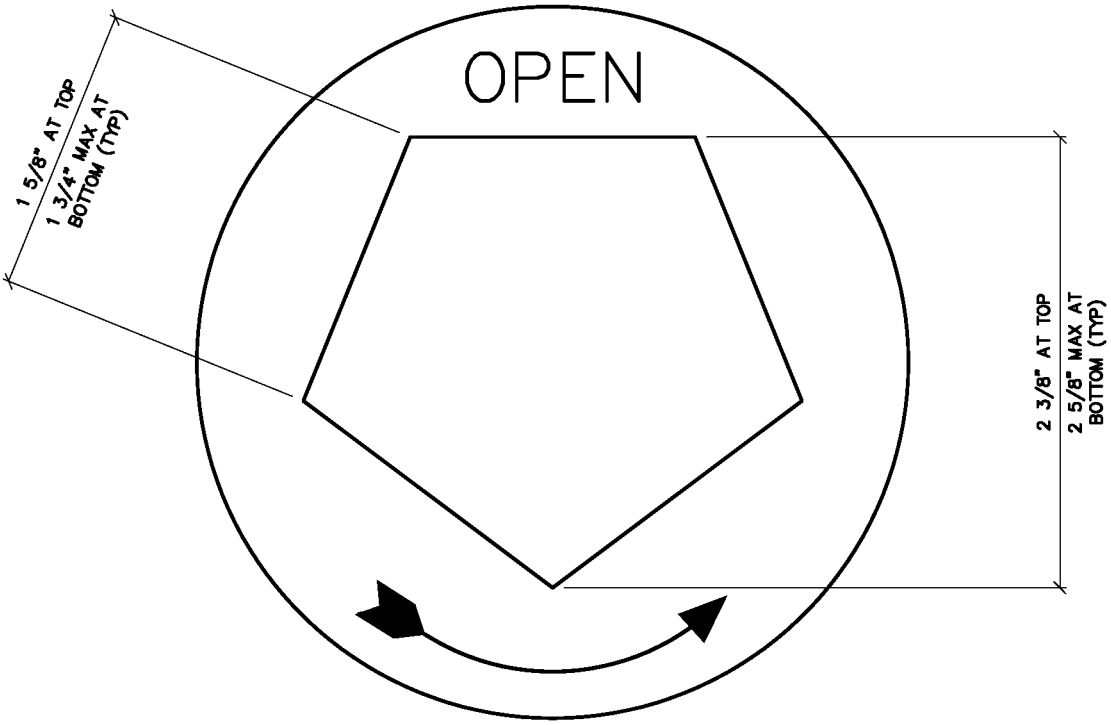

DENVER WATER
1600 West 12th Avenue • Denver, Colorado 80204
Phone(303)628-6000 • Telecopier No.(303)628-6851

RECYCLED WATER SYSTEM PENTAGON OPERATING NUT

Scale: *NONE*	Date: *FEBRUARY 2004*	
Drawn: C.B.B.	Tr:	Ck:
Approved:	Dr. 127	No. 35

HP 1050C PEN SETUP

PEN 1 0.0059	PEN 2 0.0177	PEN 3 0.0209	PEN 4 0.0276	PEN 5 0.0354	PEN 6 0.0394	PEN 7 0.0472	PEN 8 0.0622	PENS PEN WT.
1	2	3	4	6	7	8	253	COLORS
9	22	12	110	20	241			
21	31	23	131	40	252			
30	42	33	201	200	SCREENED 203			
41	51	43	210	SCREENED 181				
50	60	52	SCREENED 160					
70	82	63	SCREENED 163					
81	91	71						
90	113	130						
125	120	140						
132	133	143						
SCREENED 151	SCREENED 123	231						
		SCREENED 157						

ATTACHMENT A

(GENERAL INSTRUCTIONS)

INSTRUCTION FOR THE PREPARATION OF DENVER WATER EXHIBIT DRAWINGS

1) The purpose of the drawing is to clearly show the easement area or the location of the item to be licensed and the area immediately surrounding it.

2) Submitted Auto CAD files must be done in MODEL space only. No X-referencing is allowed.

   Use the provided layers only do not change layer names or layer colors.

3) The LINE TYPE scale and DRAWING scale must be the same.

4) All text sizes are based on the Simplex text style and the TXT_.10 being 1/10 of an inch high. Except for the Shadow Font. No substitutions for the Simplex template are allowed. The Shadow font Shadow.SHX is included with this standards package.

5) The North direction and arrow must be in the range from 90° to the left to 45° to the right. Having "North" at the top of the page is preferred. The 8½" side of the drawing is always the bottom of the page.

6) The tie should be to a monumented corner of the quarter section in which the easement parcel or licensed item lies. A direct tie is prefered but a tie with a maximum of two courses will be accepted.

7) All designations for quarter section lines and land corners must be for the quarter section in which they lie. Place them within that quarter section.

8) Basis of Bearings: Note that the bearing basis has three parts:

   1) Numeric value: deg. min. sec.;
   2) Monumentation: The monuments used for the bearing basis must be shown on the parcel map or described in the Basis of Bearing Note.
   3) Source of Basis: Denver Metro Area, State Plane Central Zone(Metro Grid): Outside the Metro Area, Subdivision Plat, or existing Denver Water Maps.

   - Denver Water requires two monumented corners for the Basis of Bearings.
   - Licensed items may be tied to the nearest DWD monument when available.

9) A 0.06" tick mark must be used to delineate the end points of curves and angle points if its location is not obvious. Rotate tick marks to be radial to the curve or to bi-sect the angle and place then on the TXT_.08 layer.

10) "Easement Hatching Lines". Hatch lines must be spaced 0.06" apart. (The Hatch Scale equals .48 times the drawing scale) The hatch angle must be 45° or 135° to match the Legend. Use the DWD Hatch Layer for all hatch lines.

11) Show the easement or property area in square feet and "round" it to the nearest foot if the area is less than one half acre. Show the easement or property area in acres and to three decimal places if the area is one half acre or more. i.e., 21,779 sq. ft. or 4.503 acres.

12) The initials of the person who prepared the drawing should be entered in the area marked "DRN.". All other fields will be completed by Denver Water.

13) General information:
   - All Z coordinates must be Zero.
   - Files must not be Zipped if they will fit on a CD.
   - The use of course tables should be avoided.
   - Label the quarter/quarter for each one shown on the parcel map.
   - Include a Bar Scale that matches the DWD standard of 1/10 of an inch by 3".
   - Drawing accuracy
     All lines and curves must be drawn accurately to two decimal places for distance and to one half second for bearings.
   - When multiple easement parcels exist they must be separated by the type of easement document being used and grouped by owners.

14) Specimen_G should only be used when requesting a license for an irregular area for a use such as grading, rip rap, or a lawn irrigation system. The perimeter should be simplified to avoid using multiple small courses.

LEGEND		
BOUNDARY D.W.D. PROPERTY	DOCUMENT DATED	DENVER WATER
BNDRY EXISTING D.W.D. ESMT	SEC'Y FILE DOC.	
	RIMS ITEM NO.	
	CARD NO.	
EASEMENT/PROPERTY ACQUIRED	DRN. ZYX PM. S.	LEAVE THIS SPACE BLANK
ESMT/PROP/LIC GRANTED	APPD	DATE: SEPTEMBER 1, 2004
	SHEET 1 OF 8 SHEETS	SCALE: 1" = 1' CAD

D.W.D. PROPERTY MANAGMENT STANDARDS. 10222004

(CAD SPECIMEN_A)

STANDARDS

DRAWING NOT TO SCALE

LAYER NAME	LINE WEIGHT	LAYER COLOR
ANNO	0.010 IN.	MAGENTA
BLD_FOOTPRINT	0.010 IN.	MAGENTA
BORDER	0.035 IN.	WHITE
LN_CNTERLN	0.010 IN.	MAGENTA
EASMT_ACQ_BNDY	0.021 IN.	RED
EXT_LN_DWDROW	0.043 IN.	YELLOW
EXT_LN_DWDPROP	0.043 IN.	YELLOW
FACILITY_PROFILE	0.010 IN.	MAGENTA
HATCH	0.010 IN.	MAGENTA
HEADGATE	0.010 IN.	MAGENTA
LIC_CNTR_LN	0.043 IN.	YELLOW
LOT_LN	0.010 IN.	MAGENTA
MONUMENTS	0.010 IN.	MAGENTA
NOTES	0.010 IN.	MAGENTA
EXT_OWNERSHIP	0.010 IN.	MAGENTA
EXT_ESMT-Other	0.010 IN.	MAGENTA
PARKING_LOTS&ISLANDS	0.010 IN.	MAGENTA
RIVERLN	0.013 IN.	BLUE
EXT_LN_SEC-16TH	0.010 IN.	MAGENTA
EXT_LN_SEC-64TH	0.010 IN.	MAGENTA
EXT_LN_SEC-FULL	0.010 IN.	MAGENTA
EXT_LN_SEC-QUARTER	0.010 IN.	MAGENTA
SECCOR	0.010 IN.	MAGENTA
STREET_R-O-W_LN	0.017 IN.	GREEN

LAYER NAME	SIMPLEX TEXT STYLE	LAYER COLOR
TXT_.05	L50	210 (magenta)
TXT_.06	L60	210 (magenta)
TXT_.08	L80	210 (magenta)
TXT_.10	L100	160 (blue)
TXT_.12	L120	70 (green)
TXT_.14	L140	10 (red)
TXT_.12SH	L120SH	210 (magenta)
TXT_.175SH	L175SH	210 (magenta)

STANDARD SYMBOLS

SYMBOL	NAME	LAYER
	SEC COR	SECCOR
	HEAD GATE	HEADGATE
	BREAK LINE	LAYER (VARIES)

LINETYPES

DWDROW
DWDPROP
CENTERLN
SEC_QUARTER
SEC_FULL
SEC_16th
SEC_64th
RIVERLN

SAMPLE MATHC LINE

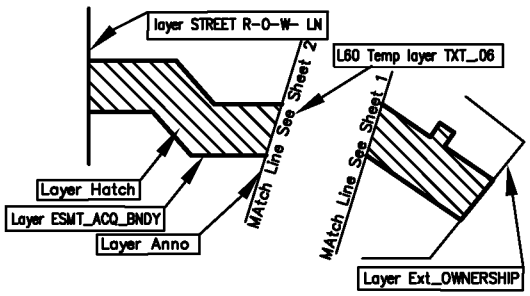

STANDARD GRAPHIC SCALE

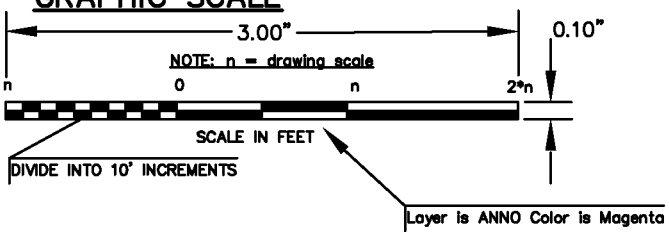

Only Scales in Multiples of 10 are exceptable i.e., 10, 20, 30...

CAD Layer TXT.08

L80 Temp Layer TXT_.08

CAD Temp L80

NORTH ARROW

See note 5) Instructions

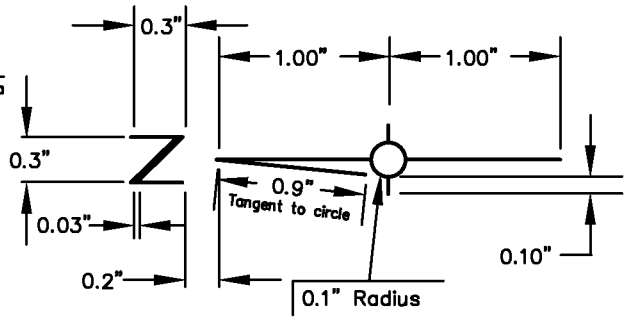

LEGEND

- BOUNDARY D.W.D. PROPERTY
- BNDRY EXISTING D.W.D. ESMT
- EASEMENT/PROPERTY ACQUIRED
- EASEMENT/PROPERTY GRANTED

DOCUMENT DATED SEC'Y FILE DOC. RIMS ITEM NO. CARD NO.	DENVER WATER	
DRN. ZYX PM. S.	LEAVE THIS SPACE BLANK	
APPD	DATE: SEPTEMBER 1, 2004	
SHEET 2 OF 8 SHEETS	SCALE: 1" = 1'	CAD

D.W.D. PROPERTY MANAGMENT STANDARDS. 10222004

(SPECIMEN_B)

BORDER/TITLE BLOCK
DRAWING NOT TO SCALE

NN 1/4 SECTION ##, TOWNSHIP # SOUTH, RANGE ## WEST 6th P M

---- CITY AND COUNTY OF DENVER ----

N

10.22"

7.92"

PARCEL CONTAINS #### ACRES±

LEGEND		
BOUNDARY D.W.D. PROPERTY	DOCUMENT DATED	DENVER WATER
BOUNDARY D.W.D. EASEMENT	SEC'Y FILE DOC.	LEAVE THIS SPACE BLANK
EASEMENT ACQUIRED	RIMS ITEM NO.	
EASMT/PROP/LIC/GRANTED	CARD NO.	
	DRN. ZYX PM.——— S.	
	APPD	DATE: SEPTEMBER 1, 2004
	SHEET 3 OF 8 SHEETS	SCALE: 1" = 100' CAD

D.W.D. PROP. ADMIN. STD. 10222004

(SPECIMEN C)

PERIMETER DEDSCRIPTION

DRAWING NOT TO SCALE

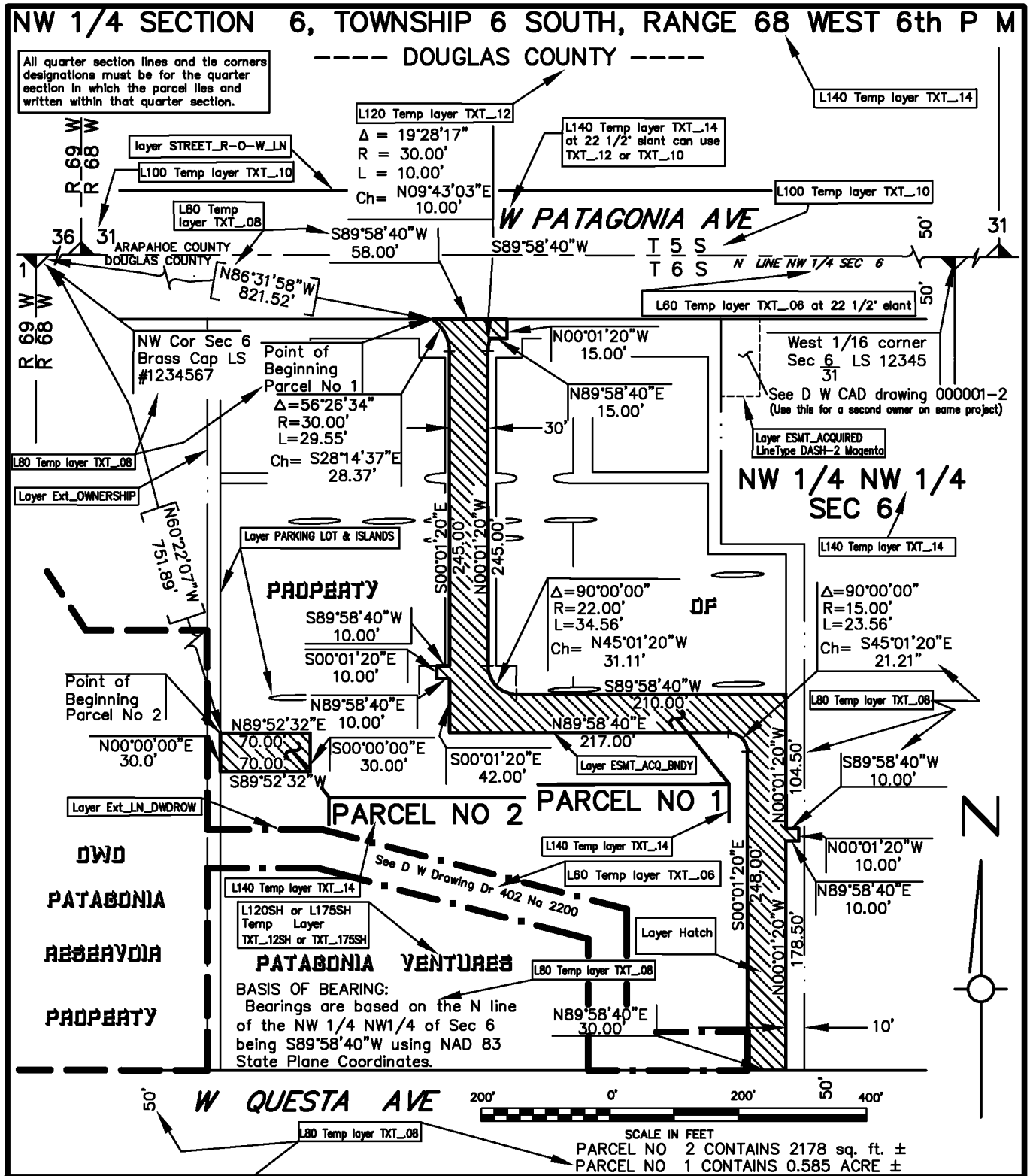

(SPECIMEN_D)

OVERHEAD CROSSING
DRAWING NOT TO SCALE

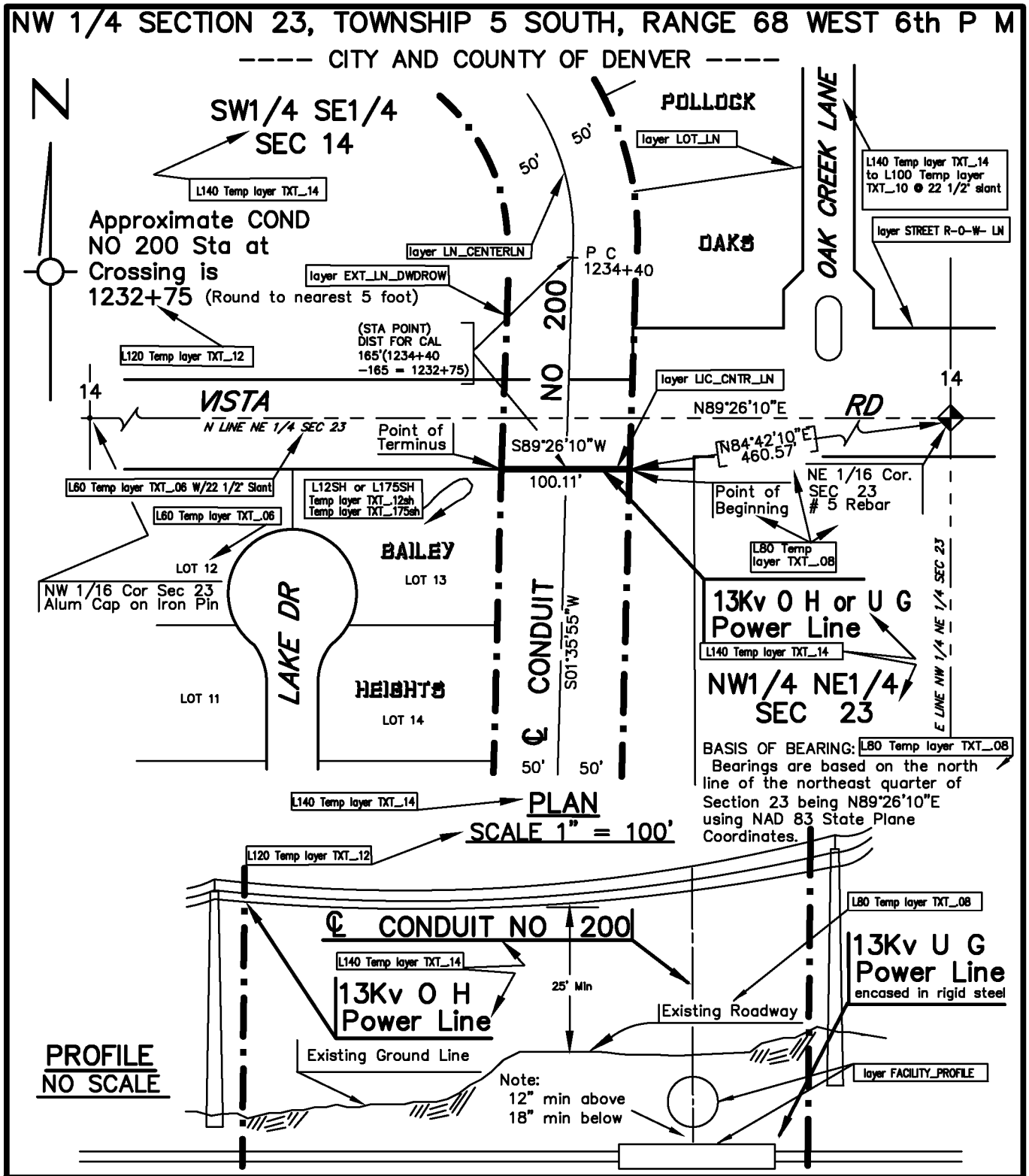

LEGEND		
BOUNDARY D.W.D. EASEMENT	DOCUMENT DATED	DENVER WATER
LICENSE GRANTED	SEC'Y FILE DOC.	LEAVE THIS SPACE BLANK
	RIMS ITEM NO.	
	CARD NO.	
	DRN. ZYX PM. S.	
	APPD	DATE: SEPTEMBER 1, 2004
	SHEET 5 OF 8 SHEETS	SCALE: 1" = 100' CAD

D.W.D. PROPERTY MANAGMENT STANDARDS. 10222004

(SPECIMEN_E)

UNDERGROUND CROSSING
DRAWING NOT TO SCALE

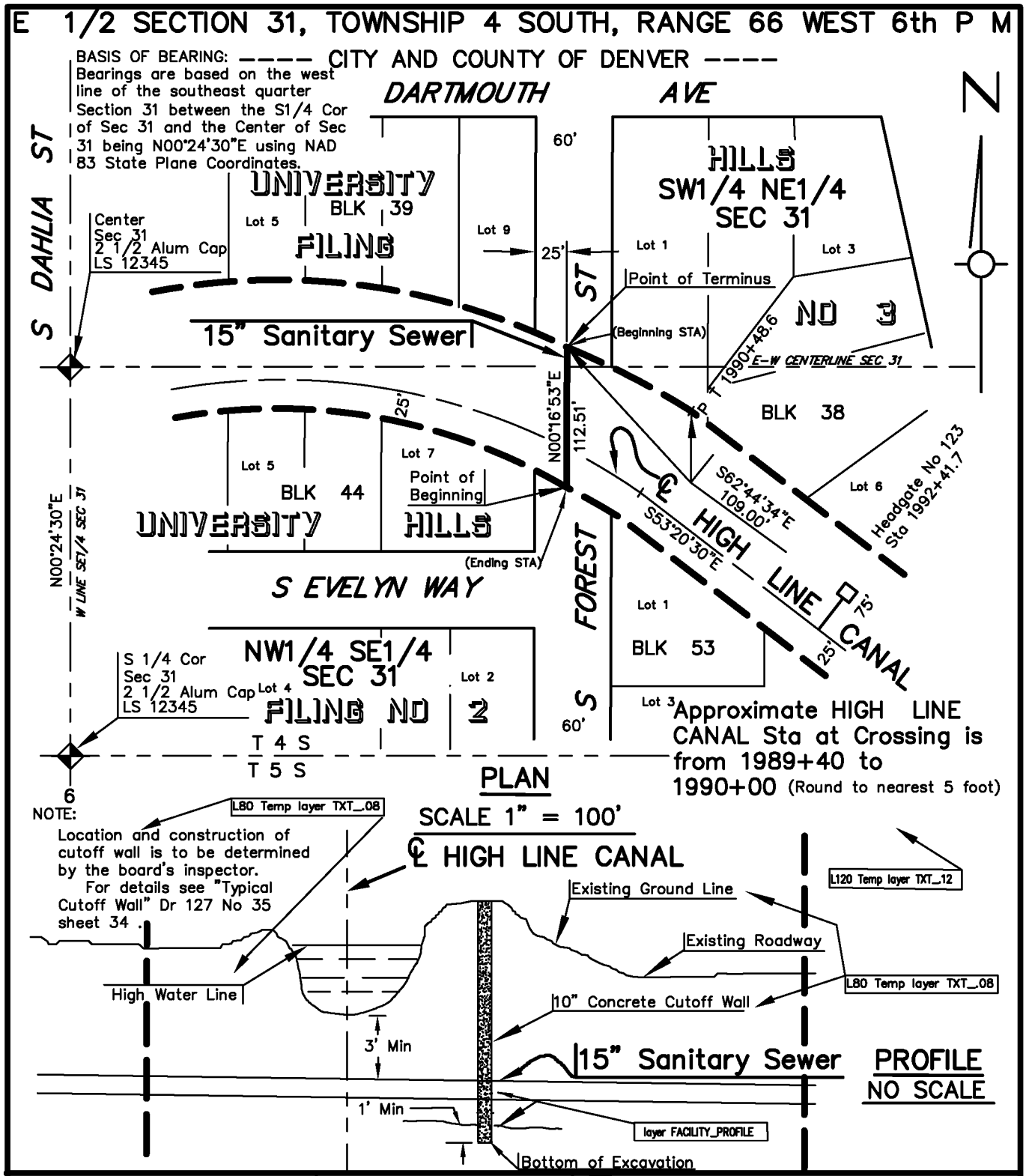

(SPECIMEN_F)

CENTERLINE DESCRIPTION

DRAWING NOT TO SCALE

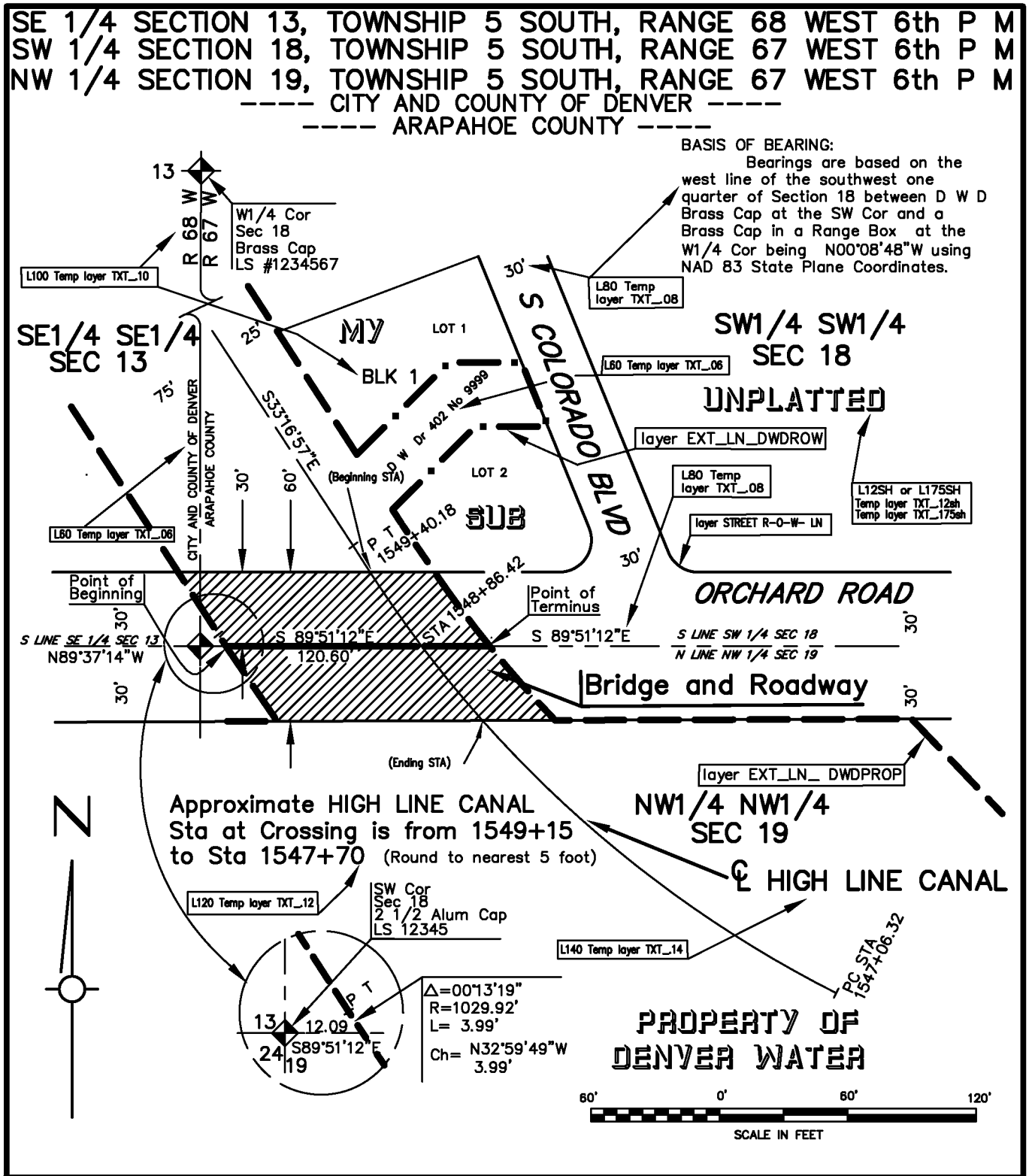

LEGEND		
BOUNDARY D.W.D. PROPERTY	DOCUMENT DATED	DENVER WATER
BNDRY EXISTING D.W.D. ESMT	SEC'Y FILE DOC.	LEAVE THIS SPACE BLANK
EASEMENT GRANTED	RIMS ITEM NO.	
	CARD NO.	
	DRN. ZYX PM. S.	
	APPD	DATE: SEPTEMBER 1, 2004
	SHEET 7OF 8 SHEETS	SCALE: 1" = 100' CAD

D.W.D. PROPERTY MANAGMENT STANDARDS. 10222004

(CAD SPECIMEN_G)

SIMPLIFIED AREA

DRAWING NOT TO SCALE

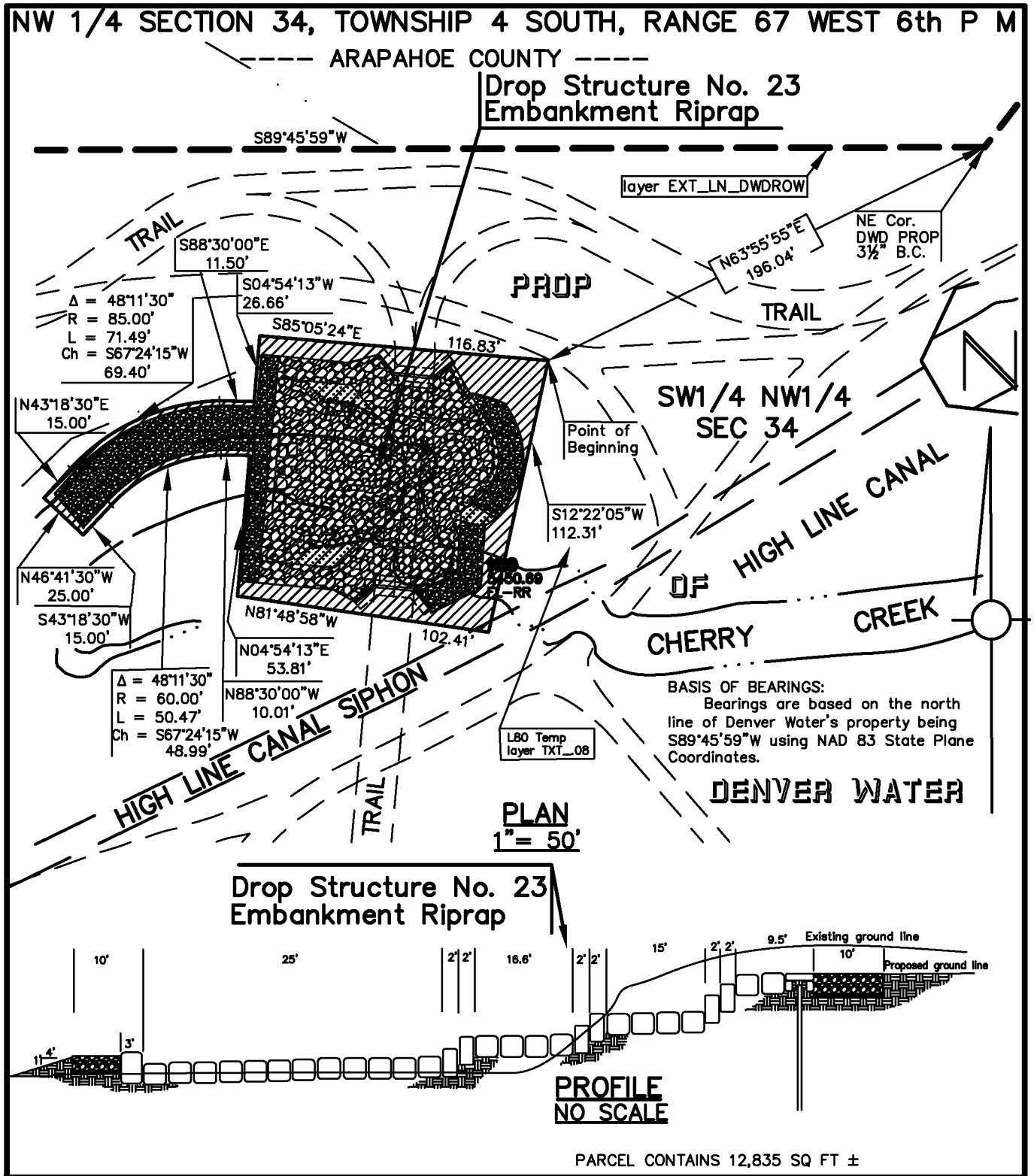

LEGEND	DOCUMENT DATED	DENVER WATER
BOUNDARY D.W.D. PROPERTY	SEC'Y FILE DOC.	
LICENSE AREA GRANTED	RIMS ITEM NO.	LEAVE THIS SPACE BLANK
	CARD NO.	
	DRN. ZYX PM. S.	
	APPD	DATE: SEPTEMBER 1, 2004
	SHEET 8 OF 8 SHEETS	SCALE: CAD

D.W.D. PROPERTY MANAGMENT STANDARDS. 10222004

(SPECIMEN_H)

FIRE HYDRANT EASEMENTS
DRAWING NOT TO SCALE

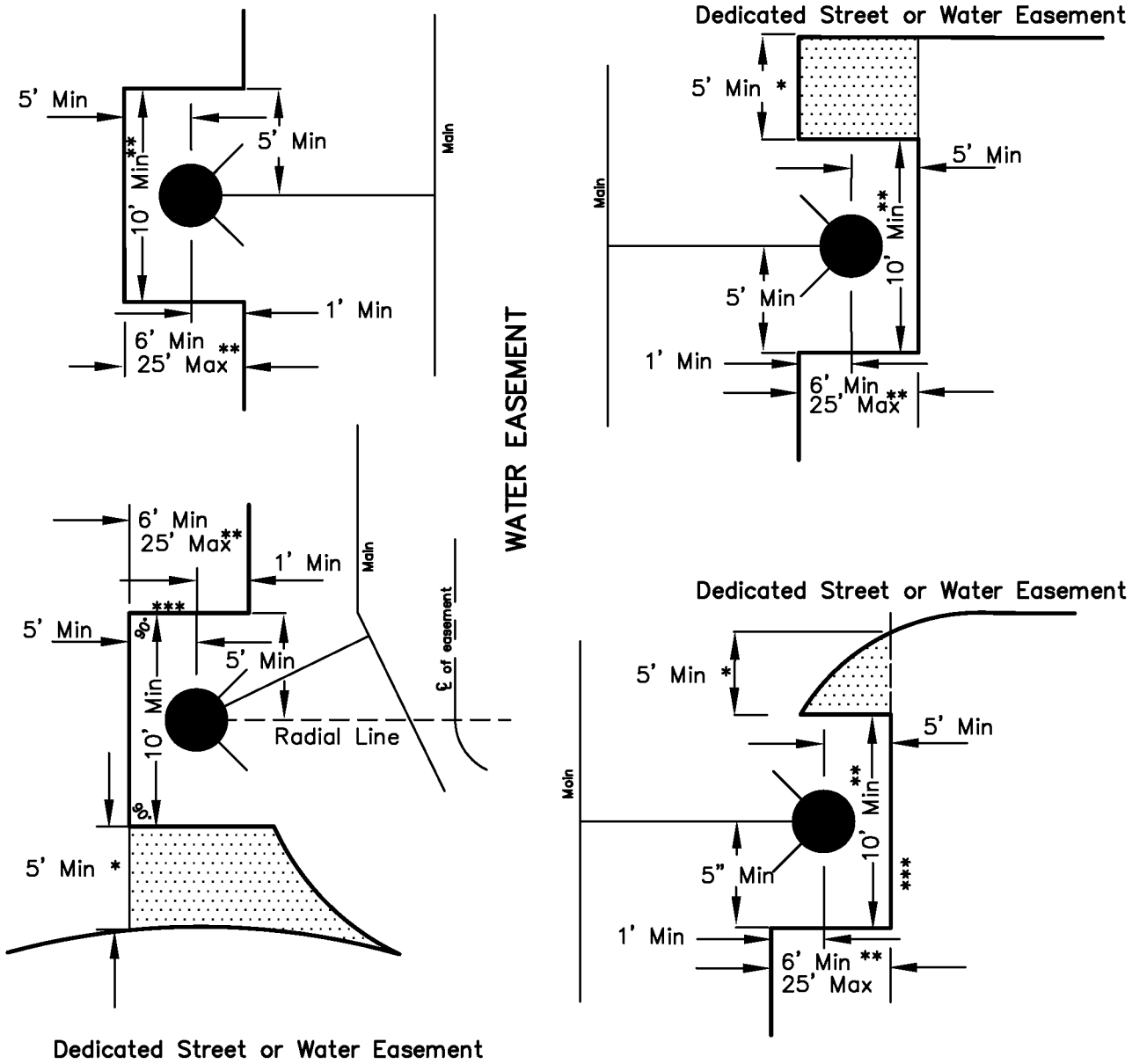

* If this distance is less than 5 feet the shaded area must be added to the water easement.

** If the easement length is over 25 feet it must be a minimum of 30 feet wide.

*** All water easement lines around any fire hydrant must be straight with the side easement lines perpendicular to or parallel with the radial line from the ℄ of the main easement.

	DOCUMENT DATED SEC'Y FILE DOC. RIMS ITEM NO. CARD NO.	DENVER WATER TYPICAL FIRE HYDRANT EASEMENT
	DRN. ZYX PM. ——— S.	
	APPD	DATE: SEPTEMBER 1, 2004
	SHEET 1 OF 1 SHEETS	SCALE: CAD

D.W.D. PROPERTY MANAGMENT STANDARDS. 10222004

ABBREVIATION LIST

ø	DIAMETER
AC	ALTERNATING CURRENT
ASTM	AMERICAN SOCIETY FOR TESTING AND MATERIALS
AVE	AVENUE
AWWA	AMERICAN WATER WORKS ASSOCIATION
BO	BLOWOFF
℄	CENTERLINE
CI	CAST IRON
CONC	CONCRETE
CONT	CONTINUOUS
CU	CUBIC
DBL	DOUBLE
DI	DUCTILE IRON
DIST	DISTANCE
DW	DENVER WATER
EA	EACH
EL	ELEVATION
EXIST	EXISTING
FL	FLOW LINE
FLG	FLANGE
FLR	FLOOR
FT	FOOT OR FEET
GA	GAGE
GALV	GALVANIZED
HVY	HEAVY
Hz	HERTZ
ID	INSIDE DIAMETER
INV	INVERT
IP	IRON PIPE
LP	LIGHTING PANEL
MAX	MAXIMUM
MH	MANHOLE
MA	MILLIAMP
MIN	MINIMUM
MJ	MECHANICAL JOINT
N	NORTH
N/A	NOT APPLICABLE
NC	NORMALLY CLOSED
NO	NUMBER, NORMALLY OPEN
OC	ON CENTER
OD	OUTSIDE DIAMETER
PC	POINT OF CURVE
PE	PLAIN END
PI	POINT OF INTERSECTION
PL	PROPERTY LINE, PLATE (STEEL)
PRESS	PRESSURE
PRV	PRESSURE REGULATING VALVE
PSF	POUNDS PER SQUARE FOOT
PSI	POUNDS PER SQUARE INCH, GAUGE
PT	POINT OF TANGENCY
PVC	POLY (VINYL CHLORIDE)
R	RADIUS
REINF	REINFORCING
REQD	REQUIRED
RH	RIGHT HAND
ROW	RIGHT-OF-WAY
S	SOUTH
SQ	SQUARE
ST	STREET
STD	STANDARD
THD	THREAD, THREADED
TOP	TOP OF PIPE
XMTR	TRANSMITTER
TYP	TYPICAL
V	VOLT
W/	WITH
W/O	WITHOUT
WWF	WELDED WIRE FABRIC
YD	YARD