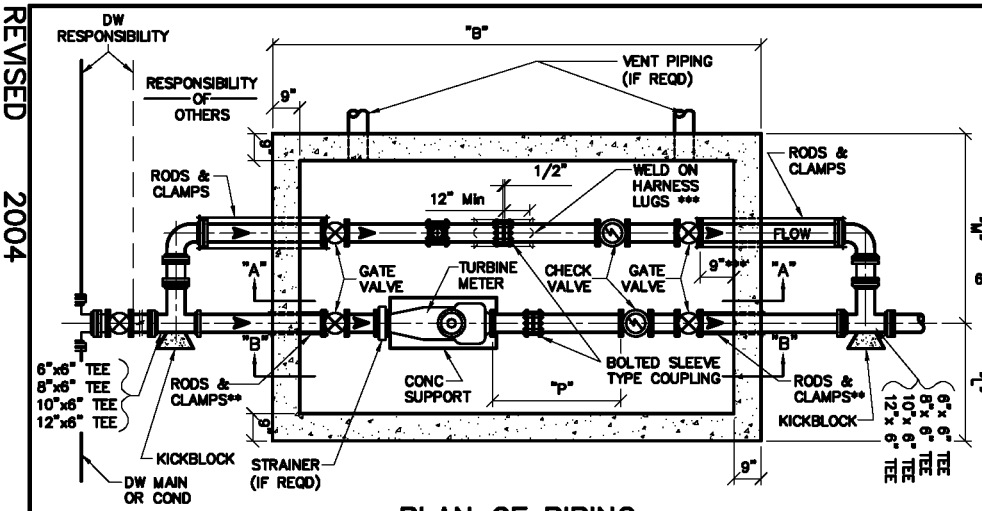

PLAN OF PIPING

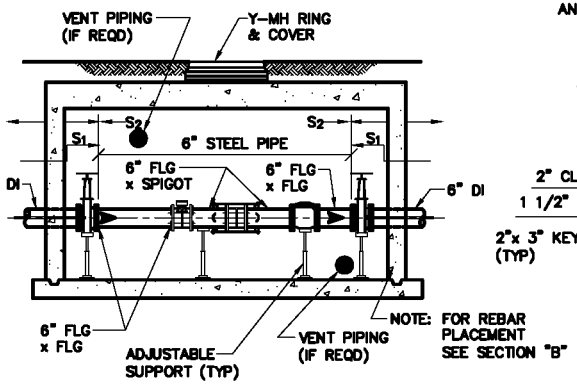

SECTION "A"

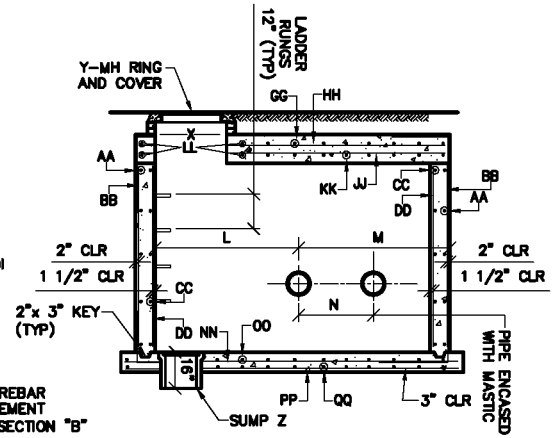

SECTION "C"

* SEE PARAGRAPH 6.18 AND MS-25.
** SEE SHEET 25 (NO STANDARD FOR 12" PIPE).
*** SEE SHEET 24.

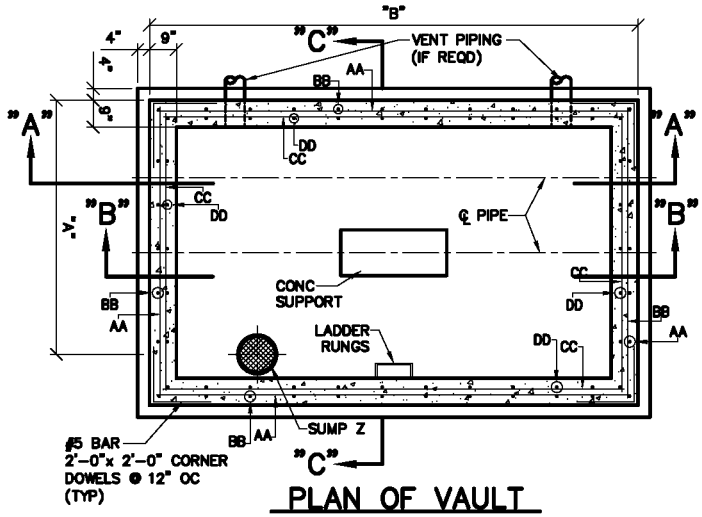

PLAN OF VAULT

NOTES:

PROVIDE VAULT POWER, VENTING, SUMP PUMP, AND TELEMETRY AS REQD BY DENVER WATER. THE DISTANCE BETWEEN RUNGS, CLEATS, AND STEPS SHALL NOT EXCEED 12 INCHES AND SHALL BE UNIFORM THROUGHOUT THE LENGTH OF THE LADDER.

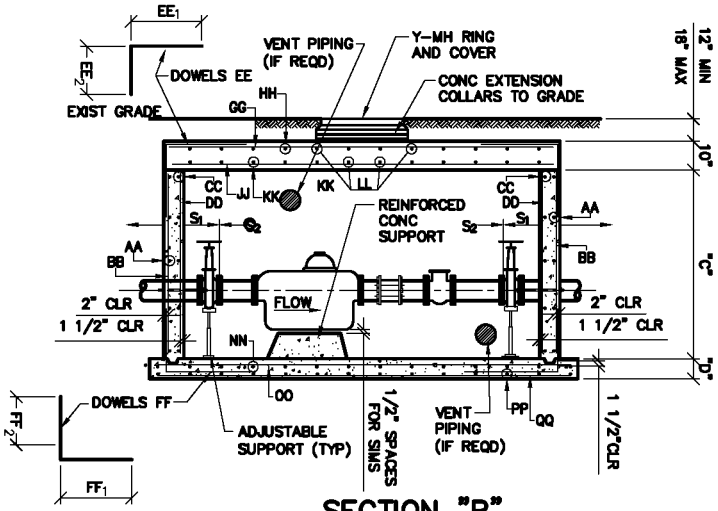

SECTION "B"

NOTES:

S_1 – TO BE INSTALLED AT TIME OF VAULT CONSTRUCTION. APPROPRIATE SIZE OF BLIND FLANGE TO BE INSTALLED.

S_2 – TO BE INSTALLED AT A LATER DATE. ONLY ONE OF THESE METERS IS TO BE INSTALLED AT ANY GIVEN TIME BASED UPON CONTRACT. OTHER SIDE IS TO REMAIN VACANT AND BLIND FLANGED.

POLYWRAP ALL BURIED PIPE, VALVES, FITTINGS, AND CLAMPS. REINFORCEMENT SHOWN IS MINIMUM.

DENVER WATER
1600 West 12th Avenue • Denver, Colorado 80204
Phone(303)628-6000 • Telecopier No.(303)628-6851

MASTER METER FOR EMERGENCY INTERCONNECTION PLANS

Scale: NONE
Date: JUNE 1995
Drawn: C.B.B.
Tr:
Ck:
Approved:
Dr. 127 No. 35

REVISED 2004