REVISED 2004

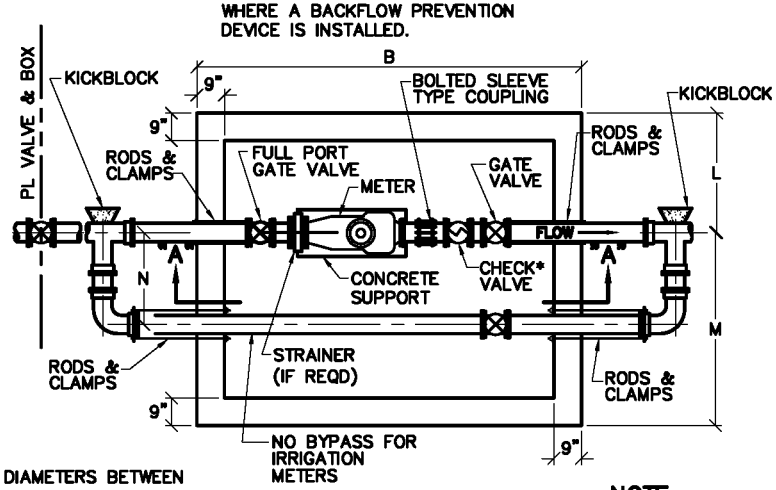

NOTE:
MIN 5 PIPE DIAMETERS BETWEEN METER AND VALVES. (BOTH SIDES)

PLAN OF PIPING

NOTE:
1" MASTIC TYP @ ALL RODS THRU WALLS.

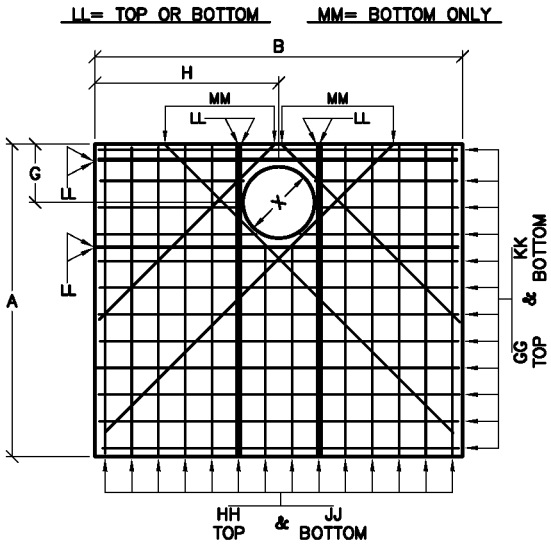

ROOF SLAB

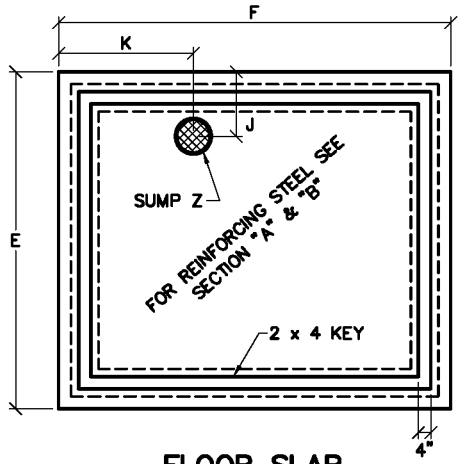

FLOOR SLAB

NOTE:
THE ROOF SLAB MAY BE CAST IN SECTIONS FOR FUTURE ACCESS. THE SECTIONS SHALL BE CAST SUCH THAT THE INDIVIDUAL SECTION WEIGHT DOES NOT EXCEED 7,500 POUNDS ACCORDING TO MS-26.

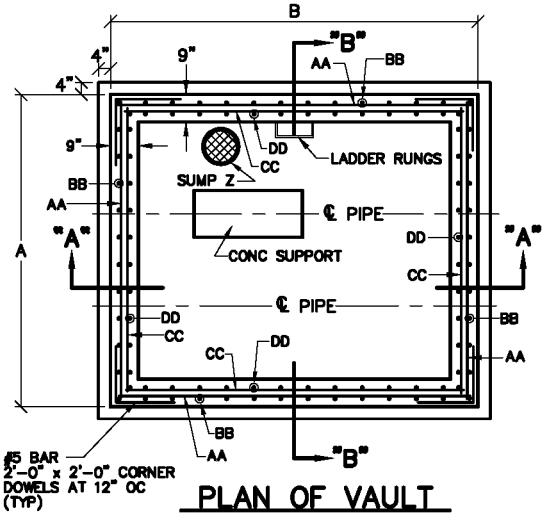

PLAN OF VAULT

*SEE 6.18 AND MS-25

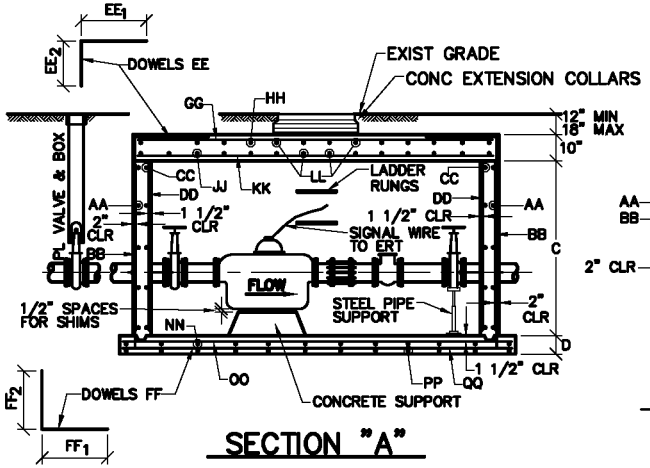

SECTION "A"

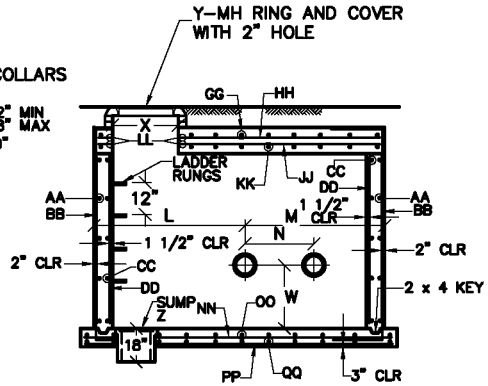

NOTE: PIPE ENCASED WITH MASTIC

SECTION "B"

NOTE:
EACH METER REQUIRES AN ELECTRONIC DIGITAL ENCODER OR MECHANICALLY ENCODED REGISTER WITH AN ITRON ERT EXCEPT FOR MASTER METER DISTRIBUTORS. DENVER WATER WILL DETERMINE TYPE OF ERT AND LOCATION PRIOR TO VAULT INSTALLATION.

NOTE:
THE DISTANCE BETWEEN RUNGS, CLEATS AND STEPS SHALL NOT EXCEED 12 INCHES AND SHALL BE UNIFORM THROUGHOUT THE LENGTH OF THE LADDER.

DENVER WATER
1600 West 12th Avenue • Denver, Colorado 80204
Phone(303)628-6000 • Telecopier No.(303)628-6851

TURBINE METER

Scale: NONE
Date: AUGUST 1995
Drawn: C.B.B.
Tr:
Ck:
Approved:
Dr. 127 No. 35