ELECTRIC OPERATED 4-WAY VALVE SOLENOIDS

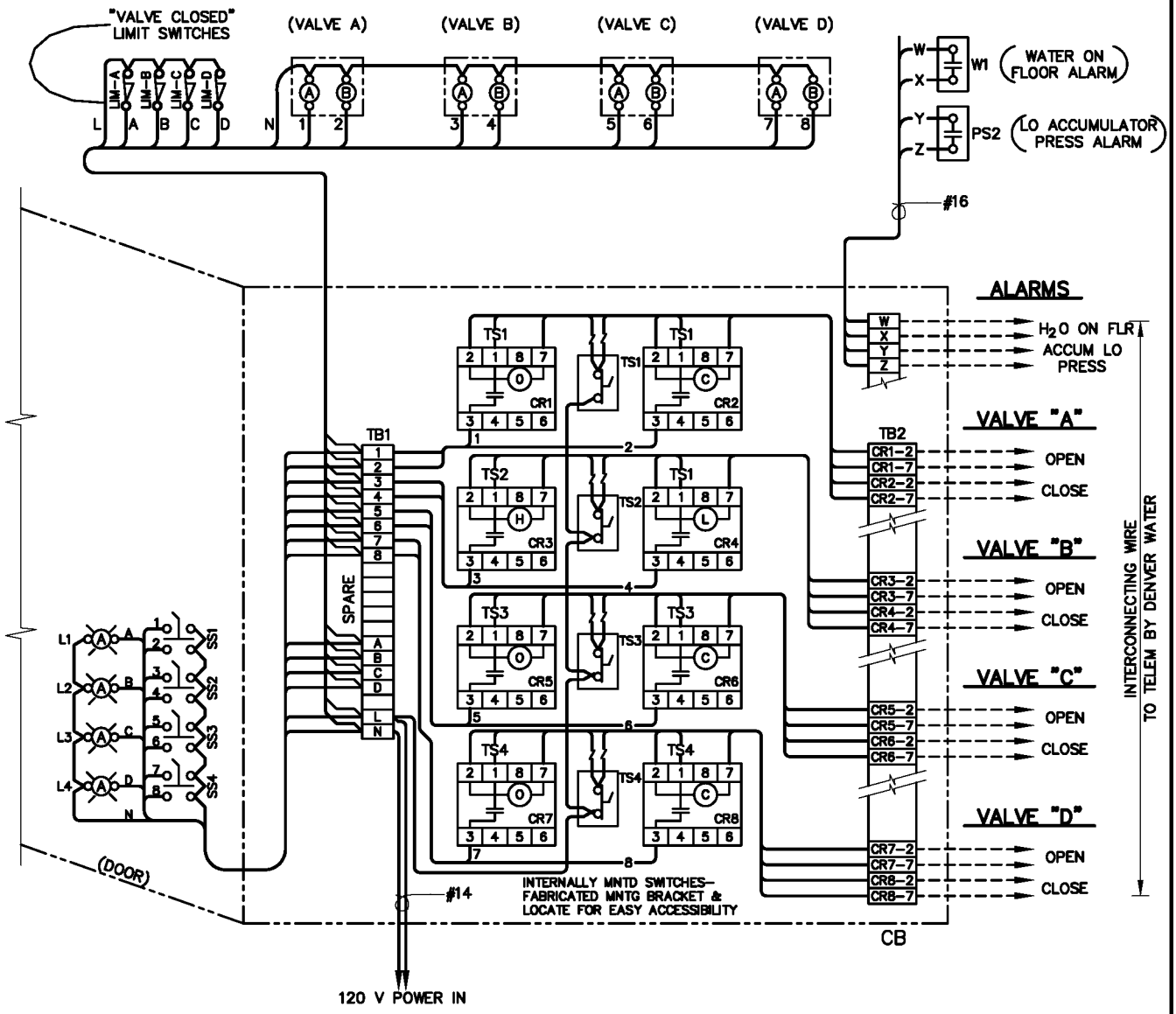

CONTROL BOX

NOTE:
CR1 THRU CR8 ARE CONTROL RELAYS.

DENVER WATER
1600 West 12th Avenue·Denver, Colorado 80204
Phone(303)628-6000·Telecopier No.(303)628-6851

INSTRUMENTATION AND CONTROL WIRING DIAGRAM TYPICAL

Scale: NONE	Date: AUGUST 1995
Drawn: C.B.B. Tr:	Ck:
Approved:	Dr. 127 No. 35