*CHECK VALVES ARE NOT REQUIRED WHERE A BACKFLOW PREVENTION DEVICE IS INSTALLED

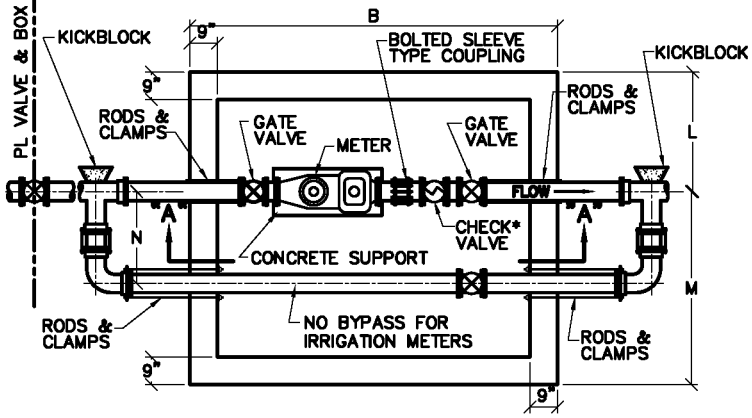

PLAN OF PIPING

NOTE:
1" MASTIC @ ALL RODS THRU WALLS.

LL= TOP OR BOTTOM MM= BOTTOM ONLY

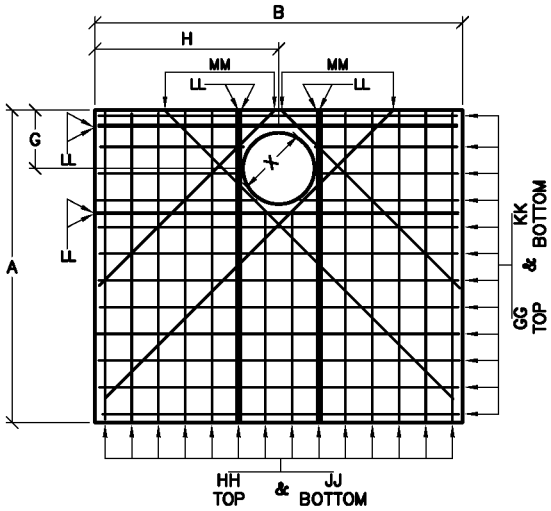

ROOF SLAB

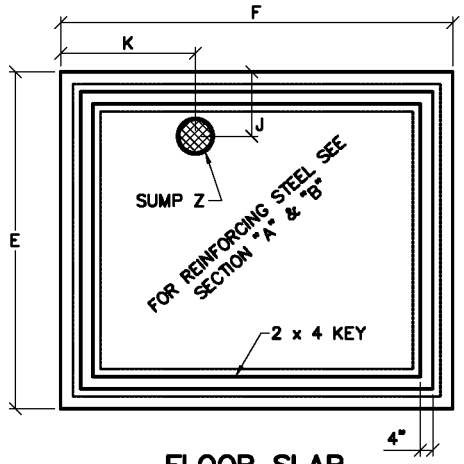

FLOOR SLAB

NOTE:
THE ROOF SLAB MAY BE CAST IN SECTIONS AS LONG AS THE INDIVIDUAL SECTION WEIGHT DOES NOT EXCEED 7,500 POUNDS ACCORDING TO MS-26.

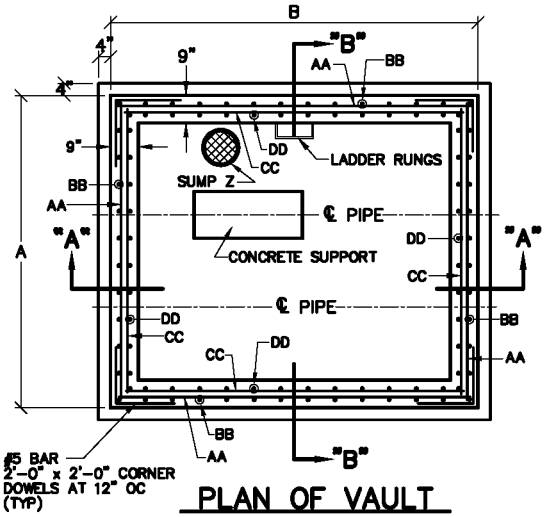

PLAN OF VAULT

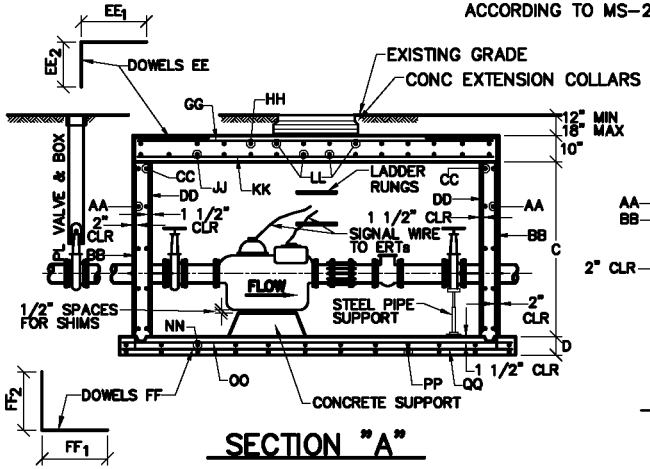

SECTION "A"

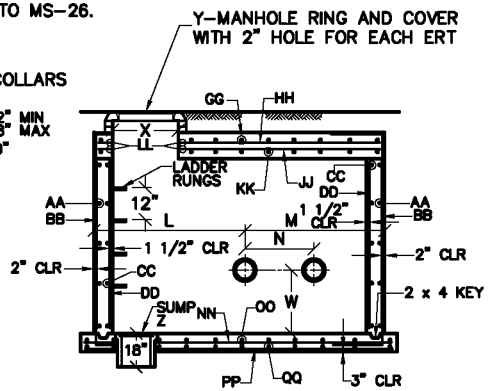

NOTE: PIPE ENCASED WITH MASTIC

SECTION "B"

SEE SHEET NO. 59 FOR DIMENSIONS CORRESPONDING TO THIS DRAWING.

NOTE:
EACH METER REQUIRES AN ELECTRONIC DIGITAL ENCODER OR MECHANICALLY ENCODED REGISTER WITH AN ITRON ERT FOR EACH REGISTER EXCEPT FOR MASTER METER DISTRIBUTORS. DENVER WATER WILL DETERMINE TYPE OF ERT AND LOCATION PRIOR TO VAULT INSTALLATION.

NOTE:
THE DISTANCE BETWEEN RUNGS, CLEATS AND STEPS SHALL NOT EXCEED 12 INCHES AND SHALL BE UNIFORM THROUGHOUT THE LENGTH OF THE LADDER.

DENVER WATER
1600 West 12th Avenue • Denver, Colorado 80204
Phone(303)628-6000 • Telecopier No.(303)628-6851

COMPACT FIRELINE METER WITH BYPASS

Scale: NONE
Date: AUGUST 1995
Drawn: C.B.B.
Tr:
Ck:
Approved:
Dr. 127 No. 35

REVISED 2004