REVISED 2004

* CHECK VALVES ARE NOT REQUIRED WHERE A BACKFLOW PREVENTION DEVICE IS INSTALLED.

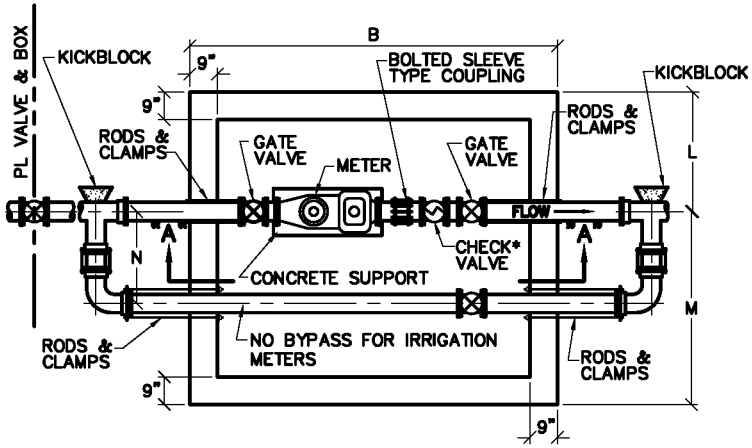

PLAN OF PIPING

NOTE:
1" MASTIC TYP @ ALL RODS THRU WALLS.

LL= TOP OR BOTTOM MM= BOTTOM ONLY

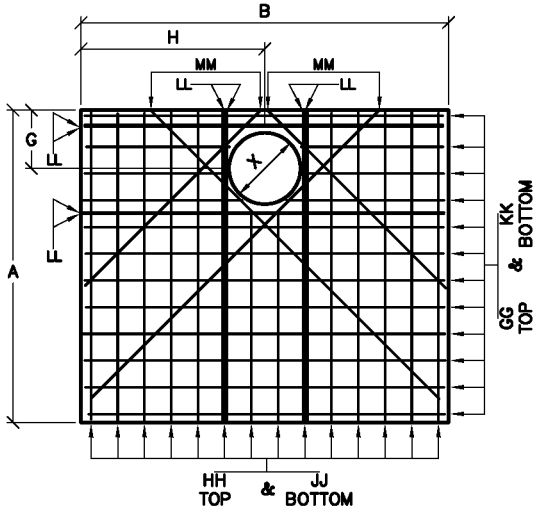

ROOF SLAB

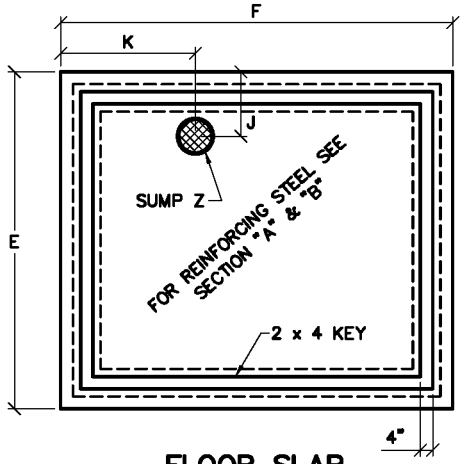

FLOOR SLAB

NOTE:
THE ROOF SLAB MAT BE CAST IN SECTIONS FOR FUTURE ACCESS. THE INDIVIDUAL SECTION WEIGHT MUST NOT EXCEED 7,500 POUNDS ACCORDING TO MS-26.

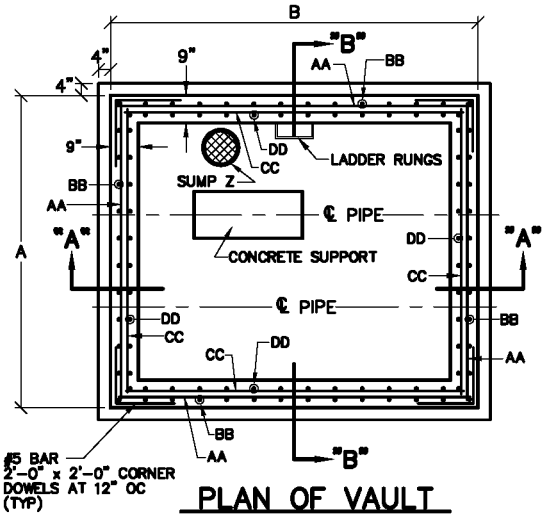

PLAN OF VAULT

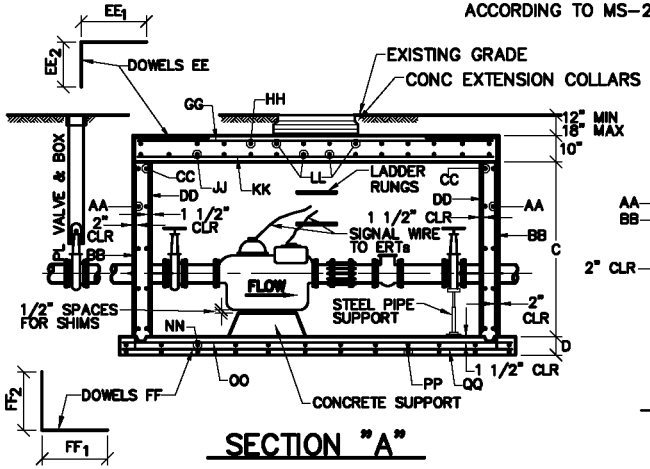

SECTION "A"

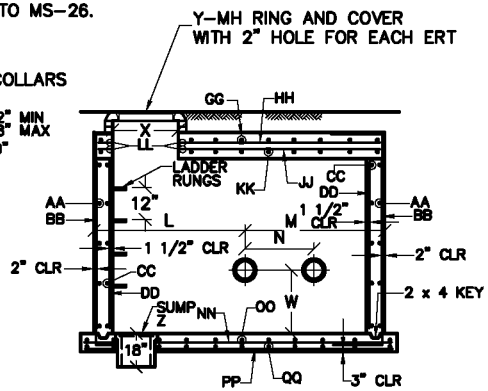

NOTE: PIPE ENCASED WITH MASTIC

SECTION "B"

SEE SHEET NO. 57 FOR DIMENSIONS CORRESPONDING TO THIS DRAWING.

NOTE:
EACH METER REQUIRES AN ELECTRONIC DIGITAL ENCODER OR MECHANICALLY ENCODED REGISTER WITH AN ITRON ERT EXCEPT FOR MASTER METER DISTRIBUTORS DENVER WATER WILL DETERMINE TYPE OF ERT AND LOCATION PRIOR TO VAULT INSTALLATION.

NOTE:
THE DISTANCE BETWEEN RUNGS, CLEATS AND STEPS SHALL NOT EXCEED 12 INCHES AND SHALL UNIFORM THROUGHOUT THE LENGTH OF THE LADDER.

DENVER WATER
1600 West 12th Avenue • Denver, Colorado 80204
Phone(303)628-6000 • Telecopier No.(303)628-6851

COMPOUND METER WITH BOTH CHECK VALVE AND BYPASS

Scale: NONE
Date: AUGUST 1995
Drawn: C.B.B.
Tr:
Ck:
Approved:
Dr. 127 No. 35