NOTE:

IF WIRE LENGTH EXCEEDS 150 FT ONLY BADGER METER MAY BE USED.

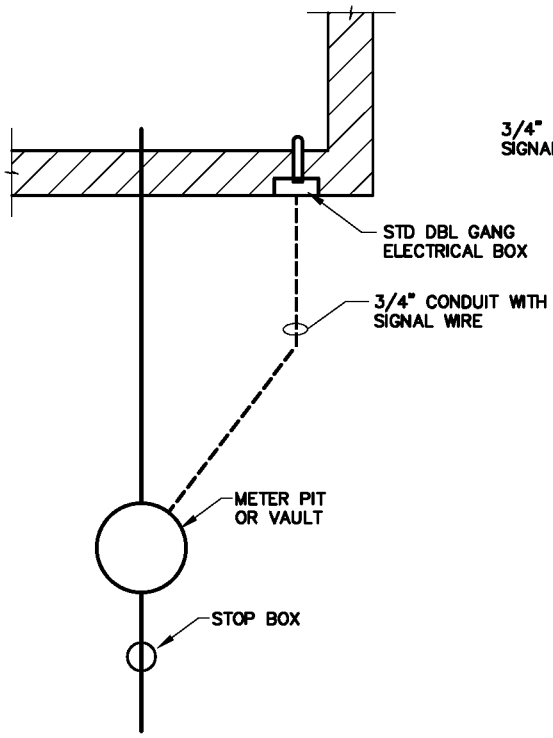

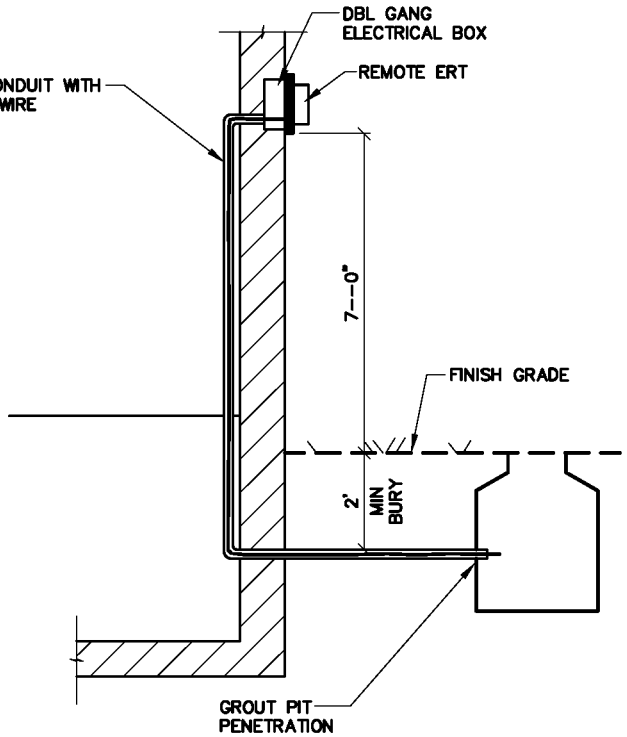

DENVER WATER
1600 West 12th Avenue · Denver, Colorado 80204
Phone(303)628-6000 · Telecopier No.(303)628-6851

METER PIT WITH REMOTE ERT INSTALLATION ON OUTSIDE BUILDING WALL

Scale: NONE	Date: DECEMBER 2003	
Drawn: C.B.B.	Tr:	Ck:
Approved:	Dr. 127	No. 35

REVISED 4-2004