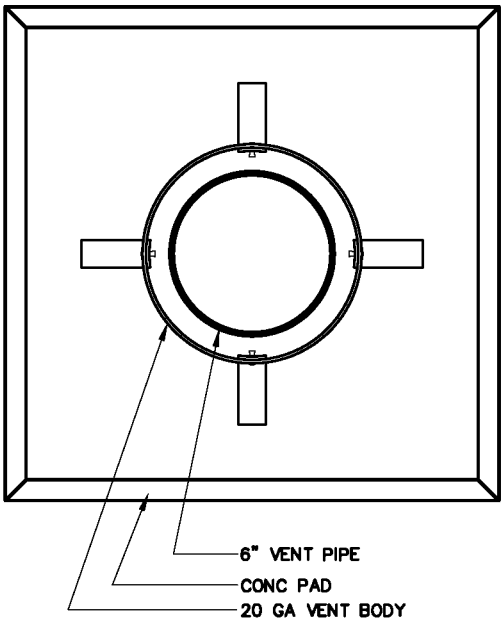

BASE DETAIL

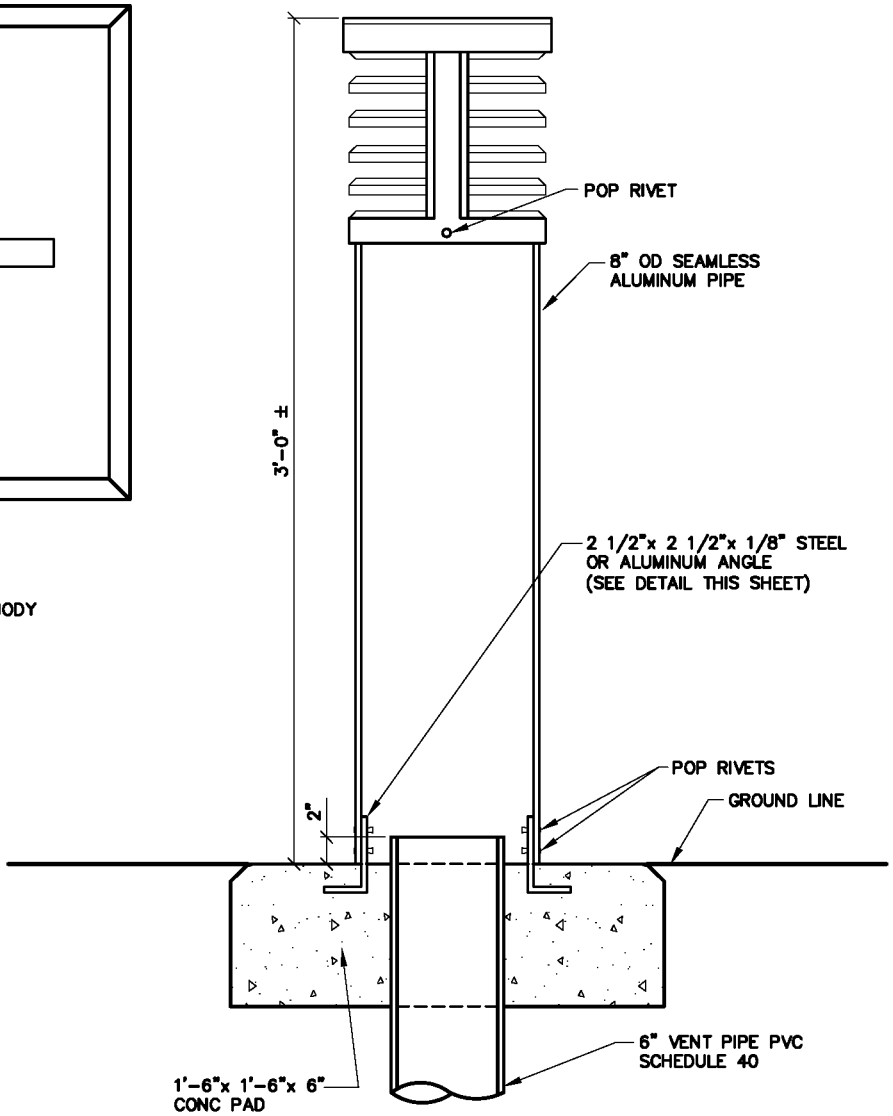

ROUND VENT SCREEN

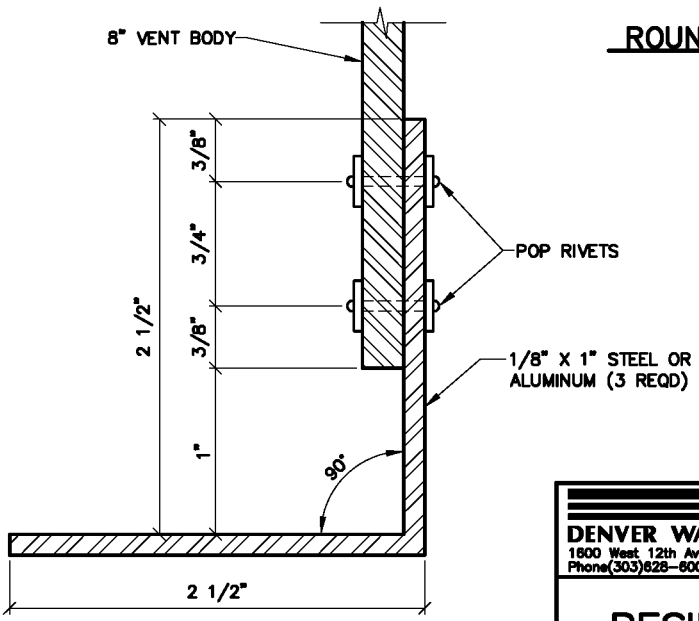

STEEL OR ALUMINUM ANGEL DETAIL

NOTE:
COLOR SHALL BE OLIVE GREEN OR FLAT BLACK TO MATCH SURROUNDINGS.

DENVER WATER
1600 West 12th Avenue • Denver, Colorado 80204
Phone(303)628-6000 • Telecopier No.(303)628-6851

RESIDENTIAL VENT ASSEMBLY

Scale: NONE		Date: JUNE 1995	
Drawn: C.B.B.	Tr:	Ck:	
Approved:		Dr. 127	No. 35

REVISED 2004