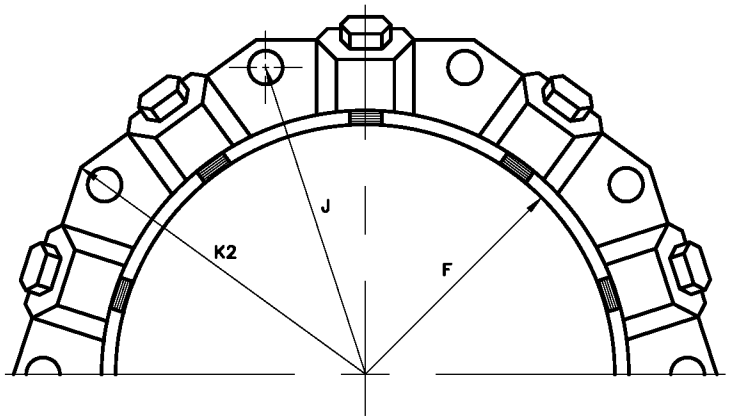

MECHANICAL JOINT RESTRAINT

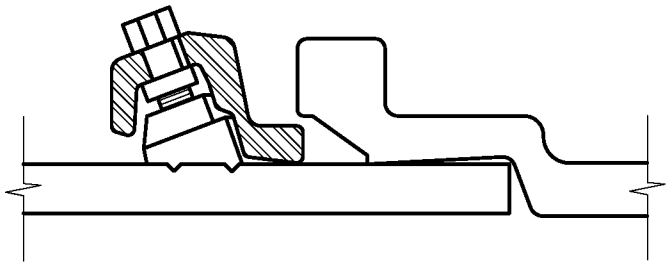

WEDGE DETAIL

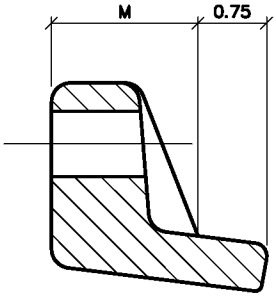

BOLT HOLE DETAIL

DIMENSIONS

	NOMINAL PIPE SIZE	NO OF BOLTS	NO OF WEDGES	K2 INCHES	J INCHES	F INCHES	M INCHES	
PVC	4"	2	2					PVC
	6"	6	3	11.12	9.50	7.00	0.88	
	8"	6	4	13.37	11.75	9.15	1.00	
	10"	8	6	15.62	14.00	11.20	1.00	
	12"	8	8	17.88	16.25	13.30	1.25	
DI	4"	4	2					DI
	6"	6	3	11.12	9.50	7.00	0.88	
	8"	6	4	13.37	11.75	9.15	1.00	
	10"	8	6	15.62	14.00	11.20	1.00	
	12"	8	8	17.88	16.25	13.30	1.25	
	16"	12	12	22.50	21.00	17.54	1.56	
	20"	14	14	27.00	25.50	21.74	1.69	

NOTES:

1. REFER TO MS-27 OR SECTION 6.05 PARAGRAPH D.
2. DIMENSIONS FOR 16" AND 20" DI PIPE NOT SHOWN.
3. OTHER MECHANICAL JOINT RESTRAINT DEVICES MUST BE APPROVED BEFORE INSTALLATION.

DENVER WATER
1600 West 12th Avenue • Denver, Colorado 80204
Phone(303)628-6000 • Telecopier No.(303)628-6851

MECHANICAL JOINT RESTRAINT DETAILS

Scale: NONE | Date: JUNE 1995

Drawn: C.B.B. | Tr: | Ck:

Approved: | Dr. 127 No. 35